The LSC White Paper on Education and Public Outreach

Goals, Status and Plans, Priorities (2010 edition)

Public Version

EPO group of the LSC[1]

August 2, 2010

[1]Email: lsc-epo@ligo.org. Wiki: http://ligo.phy.olemiss.edu/lsc_epo

Contents

Acknowledgements

This material is based upon work supported by the National Science Foundation, the Science and Technology Facilities Council of the United Kingdom, the Max-Planck-Society, the State of Niedersachsen/Germany, the Australian Research Council, the Council of Scientific and Industrial Research of India, the Istituto Nazionale di Fisica Nucleare of Italy, the Spanish Ministerio de Educacı´ on y Ciencia, the Conselleria d'Economia, Hisenda i Innovacı´ o of the Govern de les Illes Balears, the Scottish Funding Council, the Scottish Universities Physics Alliance, The National Aeronautics and Space Administration, the Carnegie Trust, the Leverhulme Trust, the David and Lucile Packard Foundation, the Research Corporation, and the Alfred P. Sloan Foundation. Any opinions, findings, and conclusions or recommendations expressed in this material are those of the authors and not necessarily reflect the views of the founding organizations. This paper was assigned LIGO document number LIGO-T1000460

I

Introduction

1 Overview

This document is the first edition of a White Paper on Education and Public Outreach (EPO) of the LIGO Scientific Collaboration (LSC). It describes the goals, status, and plans of the EPO working group of the LSC, an international network of scientists interested in public outreach. This document is revised and updated every year in the spring, and is finalized by early summer. In the spirit of other LSC white papers, the purpose of this document is to:

- Coordinate the EPO activities of the LSC;
- Exploit EPO resources and synergies among the work carried out in the LSC;
- Limit unnecessary duplication of EPO efforts and waste of resources;
- Prioritize EPO objectives.

This is the public version of the LVC-restricted document LIGO-T1000127.

2 LIGO and LSC: Fact sheet

The Laser Interferometer Gravitational-Wave Observatory (LIGO) is a facility dedicated to the detection of cosmic gravitational waves and the measurement of these waves for scientific research. It consists of two widely separated installations within the United States, at Hanford, Wash., and Livingston, La., operated in unison as a single observatory. This observatory is available for use by the world scientific community, and is a vital member in a developing global network of gravitational wave observatories which includes the German-British detector GEO 600 and the French-Italian-Dutch detector Virgo. LIGO is funded by the National Science Foundation (NSF) and operated by the California Institute of Technology and the Massachusetts Institute of Technology. It is the largest single enterprise undertaken by NSF, with capital investments of over $500+ million and operating costs of more than $30 million/year.

The LIGO Scientific Collaboration consists of 735 scientists, approximately 450 full time equivalents, from more than 50 institutions worldwide. (September 2009 data.) Since April 2007 the LSC and the Virgo Collaboration have been operating their instruments as a network and the analysis of the data of the two detectors is carried out jointly. The LIGO-Virgo Collaboration (LVC) has interactions with the numerical relativity community and established formal external collaboration with wide-field optical follow-up telescopes.

As of January 2010, the LSC comprises of 39 groups with members from 17 U.S. states: Arizona, California, Florida, Illinois, Louisiana, Maryland, Massachusetts, Michigan, Minnesota, Mississippi, Montana, New York, Oregon, Pennsylvania, Texas, Washington, Wisconsin, and from 13 countries: Australia, China, Germany, India, Italy, Japan, Korea, Hungary, Poland, Spain, Russia, UK, USA. While the greatest majority of the LSC groups are engaged in outreach at some level, 20 of them and have expressely signed a MOU with outreach attachment.

The demographics of the LSC is illustrated in Fig. 2.1 (May 2007 data). Women and minorities[1] make up 15% and 6% of the LSC, respectively. The LSC roster and additional general information of interest for the LSC can be found at:

`https://www.lsc-group.phys.uwm.edu/twiki/bin/view/LSC/WebHome.`

[1] Hispanic, African American, Native American, US-based institutions only

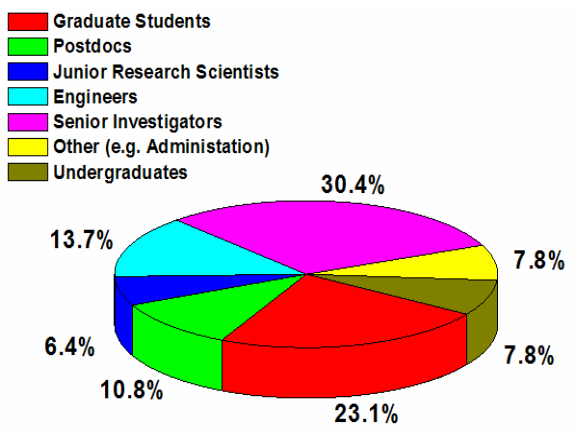

Figure 2.1: Demographics of the LSC as of May 2007 (From www.ligo.org).

3 LSC Outreach Goals

The goal of the LSC is the detection of gravitational waves from cataclysmic astrophysical sources. Direct measurement of gravitational waves will open up a revolutionary new window on the Universe, which will probe some of the most violent and energetic phenomena in the cosmos - from black holes and supernovae to the Big Bang itself. As a frontier physics effort, a core mission of the LSC is also to inspire interest in astronomy and fundamental science among the broader community.

The outreach goals of the LSC include increasing participation in science and helping to reduce existing disparities in the access of educational resources. LSC's researchers and students believe that the opportunity to discover the beauty of the cosmos should not be limited by age, culture or abode. LSC outreach programs reflect this belief and reach out to diverse socio-economic and underserved groups. The LSC EPO working group aims to communicate the vision and benefits of gravitational wave detection to the public at large in all the participating nations. By combining different ideas and approaches across participating institutions, the LSC EPO network is able to create outreach programs which are far more effective than they would be if LSC member institutions worked independently.

Outreach broader goals of the LSC include improving the attitudes of the citizenry towards frontier science and large scientific projects. The public learns not only about LIGO, GEO600, Virgo, AIGO and the science of gravitational waves, but also about physics, astronomy, frontier technology, and computer science in general. LSC's outreach activities introduce non-scientists to multi-messengers astronomy, high-energy physics, cosmology, laser technology, material science, computing facilities and data acquisition. LSC researchers also answer questions which are not directly related to gravitational wave detection, such as the origin of dark matter, particle physics and the Large Hadron Collider, structure of matter, data analysis and computing power, even philosophy.

LSC outreach programs generally introduce the public to three main concepts:

- The scientific endeavor of the LSC is motivated by the same desire for exploration, the curiosity for the unknown and the awe of nature that have inspired and motivated humankind throughout millennia of history.

- The distant Universe can be studied by non-electromagnetic means through the detection of gravitational waves. Many prospective gravitational wave sources, for example black holes, have no corresponding electromagnetic signature. Thus mapping the gravitational-wave sky will provide an understanding of the Universe in a way that electromagnetic observations cannot. As a new field of astrophysics it is quite likely that gravitational wave observations will uncover new classes of sources not anticipated in our current thinking.

- Giant, new non-conventional "telescopes" are needed to detect the gravitational-wave spectrum. The cutting-edge technology of these telescopes, called interferometers, is pushing back the

frontiers of many scientific fields. A remarkable combination of technological innovations in vacuum technology, precision lasers, measuring techniques, and advanced optical and mechanical systems is required to observe gravitational waves.

LSC's outreach programs use different ways to communicate these concepts to the public: On-site observatory outreach centers, internet-based activities, projects in the local community, after-school and diversity programs with links to formal education, interdisciplinary programs. These programs offer great potential for public education and outreach at all levels and external funding is continuously sought to realize them. Interdisciplinary programs are especially important to outreach efforts because they appeal to a broad audience. Events blending science and music or visual arts are particularly well suited to this purpose. A successful example of outreach program blending science and music is the partnership between the LSC and renowned contemporary composer and percussionist Andrea Centazzo, author of *Einstein's Cosmic Messengers*. Centazzo's concerts are preceded by a brief introduction to astronomical phenomena such as black holes and gravitational waves by a LSC scientist. This partnership has led to a series of free concerts at various LSC member institutions around the country which attract both music and science enthusiasts alike.

Figure 3.1: Andrea Centazzo performing *Einstein's Cosmic Messengers* at the University of Mississippi's Nutt Auditorium on February 5th, 2009.

4 Target Audience

The typical target audiences of LSC's outreach programs are young students, school-age children, and "informal learners", who may have some general awareness of astronomy and its long and rich cultural heritage. Increasing the awareness of current scientific research in these segments of the citizenry is essential to achieve the four goals of the "Rising Above the Gathering Storm" report:

- Increase the talent pool in all the participating nations by improving science education;
- Strengthen the participating nations' commitment to fundamental research;
- Educate, recruit, and retain top students and scientists;
- Ensure the leading role of the participaing nations in innovation and scientific research.

Acknowledging that this audience is traditionally a difficult one to attract, LSC outreach efforts continuously explore new opportunities to promote science among adolescents and young people. LIGO and her sister detectors, like most of the major scientific experiments, has a presence in social networks such as Facebook and Twitter. In addition to an online presence, site-based programs allow the target audience to directly interact with LSC researchers. LSC groups also develop programs at national and international levels which expand considerably the reach of site-based outreach activities making the LSC and the physics of gravitational waves known globally. Ambitious projects like the traveling exhibit "Astronomy's New Messengers" further complement these efforts as it travels to junior colleges, universities, museums, and other public institutions through the U.S. "Astronomy's New Messengers" is able to physically reach a broad audience of citizens from diverse socio-economic groups, different areas of the nation, and underserved groups.

5 Contributions to Human Resource Development

LSC's outreach programs also contribute to human resource development in science by providing opportunities for the mentoring of post-docs and students in the field of gravitational physics and science in general. An important component of LSC outreach programs is training students to become the next generation of science educators. Through participation to outreach projects, junior researchers and students have the opportunity to engage with the public and improve their teaching skills.

Figure 5.1: LSC graduate student Marcelo Ponce (Rochester Institute of Technology) helping a "budding scientist" to play the Black Hole Hunter game at the 2009 World Science Festival.

6 Sources of funding for EPO activities

In the U.S. outreach programs in the LSC are generally supported by existing NSF awards to individual LSC member groups. Site-based activities of the LIGO Laboratory are supported through the LIGO Laboratory budget. Occasionally, external funding is sought through educational and interdisciplinary programs of the NSF, non-profit organizations, or commercial sponsors.

The following NSF programs may be of interest to U.S. LSC members looking for EPO support:

- **Communicating Research to Public Audiences** (Solicitation 03-509):
  `http://www.nsf.gov/funding/pgm_summ.jsp?pims_id=5362&org=NSF&sel_org=XCUT&from=fund`
- **Informal Science Education (ISE)** (Solicitation 09-553):
  `http://www.nsf.gov/funding/pgm_summ.jsp?pims_id=5361&org=NSF&sel_org=NSF&from=fund`
- **Experimental Program to Stimulate Competitive Research: Workshop Opportunities (EPS)** (Solicitation NSF 06-613):
  `http://www.nsf.gov/publications/pub_summ.jsp?ods_key=nsf06613`
- **Education and Interdisciplinary Research (EIR)** (PD 03-9134):
  `http://www.nsf.gov/funding/pgm_summ.jsp?pims_id=5610`
- **International Research and Education: Planning Visits and Workshops** (Solicitation 04-035):
  `http://www.nsf.gov/funding/pgm_summ.jsp?pims_id=12815`
- **Partnerships in Astronomy & Astrophysics Research and Education (PAARE)** (Solicitation 08-562):
  `http://www.nsf.gov/funding/pgm_summ.jsp?pims_id=501046`
- **NSF Graduate Stem Fellows in K-12 Education (GK-12)** (Solicitation 09-549):
  `http://www.nsf.gov/funding/pgm_summ.jsp?pims_id=503369`
- **Partnerships for International Research and Education (PIRE) NSF Wide Programs** (Solicitation 09-505):
  `http://www.nsf.gov/funding/pgm_summ.jsp?pims_id=12819`

Foreign funding source information will be added in a future version.

7 List of conferences of interest for LSC EPO

Conference	Location and dates	Web site	Audience
AAPT Summer	Omaha NE, 7/308/3/2011	www.aapt.org	Scientists, students
AAPT Winter	Jacksonville FL, 1/812/2011	www.aapt.org	Scientists, students
AAS	Miami, 5/2327/2010	aas.org/meetings	Scientists, students
ACUMG	Los Angeles, 05/22/2010	www.acumg.org	University museums
AISES	Albuquerque, 11/1113/2010	www.aises.org	Scientists, students
APS April	Anaheim, 4/305/3/2011	www.aps.org	Scientists, students
APS March	Dallas, 3/2125/2011	www.aps.org	Scientists, students
NSBP/NSHP	Canceled 2010, 2011?	www.nsbp.org	Scientists, students
NSTA	San Francisco 3/1013/2011	www.nsta.org	K12 teachers
SACNAS	Anaheim, 9/3010/3/2010	www.sacnas.org	Scientists, students
SESAPS	Baton Rouge, fall/2010	www.aps.org/units/sesaps	Scientists, students

Table 7.1: List of conferences of interest for LSC EPO

8 Participating institutions with outreach MOU

As of January 2009, 20 LSC groups have signed outreach MOU attachments. The groups are:

- Andrews University [AUGWG]
- Australian Consortium for Interferometric Gravitational Astronomy [ACIGA]
- Caltech Relativity Group [CaRT]
- Columbia Experimental Gravity Group [GECo]
- Eotvos University [EOTVOS]
- German/British Collaboration (GEO 600) for the Detection of Gravitational Waves [GEO600]
- Hobart & William Smith Colleges LIGO Group [HWSLG]
- Michigan Gravitational Wave Group [MGWG]
- Northwestern University Gravitational Wave Astrophysics Group [NUGWAG]
- Pennsylvania State University Relativity Group [PSURG]
- Relativity and Astrophysics Group of Louisiana Tech University [RAGLT]
- Rochester Institute of Technology [RIT-CCRG]
- Sonoma State University [SSU]
- Stanford Advanced Gravitational Wave Interferometry Group [SAGWI]
- Trinity University Group [TULG]
- University of Florida LIGO Group [UF-LIGO
- University of Mississippi [UMISS]
- University of Oregon Experimental Relativity Group [UOERG]
- University of Texas at Austin Gravitational Physics Group [UTAGP]
- University of Texas at Brownsville Relativity Group [UTBRG]

II

Education and Public Outreach of LIGO Laboratory

9 Overview

The LIGO Laboratory began implementing public outreach programs at the Observatory sites after completion of construction in 1998. Early efforts included tours of the facilities, relationship building with institutions near the sites, and the hosting of K-12 teachers as summer interns. Following a decade of steady growth in the breadth of outreach activities and in the strength of regional partnerships, LIGO's site-based programs reached more than 15,000 people in 2009. Each site aims to thoughtfully serve the large underrepresented populations that reside in the nearby counties/parishes.

The birth of the LSC-EPO Working Group in 2008 has improved the Lab's outreach portfolio. LSC-EPO provides a mechanism for Lab personnel to participate in national and international gravitational wave outreach projects, bringing resources from the sites to bear on these projects as needed. Activity also flows into the Lab through LSC-EPO as personnel at LSC sites are able to connect their local constituents with education resources that are available through the Observatories. Increasing the outreach synergy between the Lab and LSC research groups will be a key area of growth for LIGO over the next several years.

10 LIGO Livingston Observatory and the LIGO Science Education Center

10.1 Past and Current Activities

In 2004, a successful proposal to the NSF authored by a partnership of LIGO, Southern University at Baton Rouge (SUBR), the Exploratorium, and the Louisiana Systemic Initiative Program and Louisiana GEAR UP resulted in the construction of the 10,000 sq. ft. Science Education Center (SEC) at the Livingston site. The SEC houses over 40 Exploratorium-style exhibits that focus on the science themes of LIGO. Auditorium and classroom space near the exhibit hall amplifies the educational value of the facility, allowing the staff to delve into topics in more depth. Three LLO outreach staff members operate the SEC with assistance from undergraduate SUBR docents and LLO staff. The Exploratorium continues to partner with the SEC on exhibit training and teacher professional development. The SEC has become a key destination for school field trips and K-12 teacher professional development activities in central Louisiana and beyond, serving 4133 school children and 284 teachers in the past year with interesting and enjoyable physics and astronomy experiences that illuminate LIGO's research.

The SEC has driven an increase in LLO's on-site outreach attendance from 1100 on-site visitors in 2004 to 5461 on-site visitors in 2009. LLO reached a total of 6653 contacts in 2009 (5461 on-site, 1192 off-site) through 144 programs and activities. In addition, SEC staff participated in 284 professional development contacts with teachers and delivered 9 professional presentations or publications. As shown below (left), the majority of current contacts are with students on-site. LLO continues to strategize new means of engaging the general public and teachers, which together make up 30% of the current LLO outreach audience.

Our audience ethnicity figures shown on the right closely correspond to the statewide demographics in Louisiana, indicating that the student population served by LLO is a balanced representation of the state as a whole.

10.2 Needs and Future Plans

The SEC has transitioned to a regional collaboration that involves Tulane University as well as all of the original SEC partners and is headed by the Baton Rouge Area Foundation (BRAF). BRAF provides an institutional umbrella under which the collaboration can continue to grow and mature. Future plans include growth in the scope and depth of the SEC's programming with an eye towards innovation as the SEC staff continues to expand the reach of the facility, reach out to the general public more effectively and leverage the facility's potential as a unique tool for enhancing the public's science literacy and the level of interest in LIGO's pioneering research. One aspect of this mission

includes a new effort to involve students and teachers from several local school districts in a continuum of repeated LIGO-based experiences over a span of years. The intention of this concentrated effort is to ramp up students' understanding of STEM professions in an authentic context, while evaluating the longitudinal effectiveness of the outreach efforts.

The SEC has seen a small decline in teachers attending professional development opportunities here at LIGO since its inception. To address this, the SEC is involved in better marketing itself to the local teachers and professional development outfits, so that the SEC is seen as a critical piece of the professional development landscape in Louisiana.

In the future the SEC will need to retain the ability to involve LIGO in new and innovative outreach work as it becomes available while at the same time serving our core audiences and ensuring that the longitudinal outreach efforts are effectively managed.

11 LIGO Hanford Observatory

11.1 Past and Current Activities

Along with LIGO Livingston, LIGO Hanford (LHO) hired a full-time outreach coordinator in 2004. In the absence of an outreach facility similar to the SEC, this single FTE served the Observatory through the close of 2009, at which time a second outreach professional joined the LHO staff. Outreach activities at Hanford have been similar to those at Livingston in flavor and intent, although with a different balance due to contrasts in local demographics and differences in facilities. The development of partnerships with groups connected to the regional K-12 system has increased the flow of field trip visitors to LHO to a level of roughly 2500 students annually. Partnerships have also played an essential role in the growth of teacher professional development at LHO. Since 2007 LIGO has collaborated on a regional Math Science Partnership project, underwritten with MSP grant funds that originate at the Federal Department of Education.

In 2008-2009, LHO participated in roughly 10,000 outreach contacts with 45% of those occurring through on-site activities such as school field trips, star parties and other International Year of Astronomy public events, observatory tours and teacher professional development workshops. Approximately 40% of the K-12 students that visited the site were from Hispanic/Latino families. LHO also interacted with Native American groups in central Washington and northeast Oregon.

11.2 Needs and Future Plans

Future plans at LHO will hinge on the NSF's disposition of a partner-based proposal for a LIGO Hanford outreach center that was reviewed and recommended for funding in the spring of 2009. The addition of a second outreach FTE now positions the Observatory for the development of the Hanford Center. Needs at LHO revolve around the continued growth of the outreach customer base and the delivery of an increasing variety of services to support this growth. LHO's outreach has benefited in recent years from the contributions of local college interns. Expanding the opportunities for interns to serve at the Observatory through grants and other means of external support is a key need related to the growth of the LHO program.

III

Education and Public Outreach of the LSC

12 Current EPO activities of the LSC

12.1 Social Networking

Why is the LSC interested in social networking?

Social networks are simply the relationships or connections that tie individuals together. With the advent of the internet and electronic communications, social networks have grown from relationships within one's own local community to relationships with individuals from across the globe and those whom we may have little personal contact with or know in professional contexts only. This expansion of the reach of social networks has evolved the character of relationships into two main categories: strong and weak [19]. A strong connection is one in which an individual has repeated contact and interaction with an individual. Because of the time and attention that a strong connection requires, an individual can only maintain a limited number of these connections. A weak connection is one in which an individual has limited interaction with and may know only within relatively impersonal or distant contexts (e.g. the real estate agent who sold you your house or a schoolmate that you haven't seen or spoken to in years).

The EPO is interested in exploiting to ability of social networks to make current LSC science and news accessible to members of the public as well as the collaboration as a whole. To that end, the EPO has established channels on the popular social networking sites Facebook (`www.facebook.com`) and Twitter (`www.twitter.com`) for outreach purpose. Blogs (we**b logs**) are also a popular way for individuals to discuss their thoughts on the happenings of their lives or other current events. To that end, the EPO has also established a subgroup called the 'Blog Squad' who bring to the group's attention blogs that are propagating inaccurate information so that a polite response from the EPO can be issued if the blog is not deemed to be irrationally critical of science in general (or a 'crackpot' blog). The current LSC social networking state (with current status, etc.) is displayed on the LIGO homepage under the heading of students/teachers/public → LIGO on Social Networking at [9]

`http://www.ligo.org/students_teachers_public/social.php`.

Facebook

Facebook is a social networking site where a user creates a profile of information about themselves. The user may be a person or a group. Once the profile is complete, the user may disseminate information to their 'friends' (other users who have established a connection with the account) through the use of the status update. When users log on, they are taken to a default home page that displays status updates and news from their 'friends.' Other utilities, known as apps, can be added to the page to do everything from play interactive games with their friends to track what books a user is reading.

Facebook has more than 300 million active users worldwide and has been ranked the #1 social networking site (based on monthly users) by a January 2009 study by Compete.com [18].

Twitter

Twitter is a social networking site that can also be considered a micro-blogging site that allows users to send and read messages known as tweets. Tweets are text based messages that are strictly limited to 140 characters which are displayed on the user's profile page and on their followers (users with a connection to the account and analogous to 'friends' on Facebook). The limitation on the number of characters that can be displayed was initially determined so that tweets could be sent as SMS (Short Message Service) messages, such as cell phone text messages, or other external applications.

Twitter does not release information on the number of specific account, but a February 2009 study by Compete.com estimated 6 million unique monthly visitors and 55 million monthly visits [18]. These numbers establish Twitter as the third most popular social networking site. An Alexa web traffic analysis has ranked Twitter to be the 14th most popular site in the world and the 13th most popular site in the United States as of 23 November 2009 [17].

LIGO's social networking for the public at large

LIGO's social networking for the public at large is the main priority EPO's internet based outreach efforts. Because of this, interactions with the public in this manner are classified as a weak connection.

Facebook

The LIGO outreach user name on Facebook is 'LIGO Scientific Collaboration' and may be accessed here:

`http://www.facebook.com/ligo.collaboration`.

(N.B. There is also a group on Facebook [a group is a special kind of account which has special settings to display content like what kind of group this is a who may join the group] with the same name that is not overseen by the EPO.) To date (23 November 2009), we are 'friends' with 97 individuals many (but not all) of whom are already members of the collaboration. Periodically, the status is set to display a relevant bit of information that may be of interest to the public and pictures related to LIGO are linked to the profile by 'friends' tagging (or identifying) that the LIGO Scientific Collaboration is in the picture.

Twitter

The LIGO outreach user name on Twitter is 'ligo' and may be accessed here: `http://twitter.com/ligo`. To date (23 November 2009), we are being followed by 67 other users many of whom are not already members of the collaboration. Tweets are posted to this account on the order of every several days and sometimes highlight related research being done outside the LSC.

LIGO's social networking for the LVC community

LIGO's social networking for the LVC community is an auxiliary opportunity for EPO's internet based outreach efforts. Because of this, interactions with the collaboration in this manner are classified as a strong connection.

Facebook

Since the LIGO EPO account on Facebook is 'friends' with many members of the collaboration, this medium also serves as a social networking opportunity for the LVC community.

A LIGO network, a label that is attached to your profile that require verification to prove that you are a member, has also been established for the LVC community to serve as a means to identifying one another within this forum and to serve as identification to the public that a user is a member of the collaboration. To take advantage of this, a user must modify their settings and specify that they would like to join the 'LIGO' (the quotes are not part of the network name) network and verify this by entering their `@ligo.org` email address. A confirmation email is then sent to that email with a link to click to complete the verification process.

Expansion plans for LIGO's social network for use as an outreach outlet

There are other social networking sites available to the EPO to utilize for outreach purposes. Two such sites are MySpace (`www.myspace.com`) and MyLife (`www.mylife.com` - formerly known as Reunion). The EPO my wish to establish a presence on MySpace, but the demographics of MySpace members are usually younger than our updates would effectively target [16]. The structure of MyLife may be unsuitable to LIGO outreach since users who do not subscribe to the site have only limited use of the site.

The EPO may also facilitate the ease of keeping Facebook and Twitter current by installing the Twitter app on our Facebook account, which will automatically update the Facebook status with the newest tweet. This will allow a single update on Twitter to be visible on Facebook with no extra work. However, is there is information that should be disseminated on Facebook only, there is no reverse automatic updating to the Twitter tweet for changes to the Facebook status.

The EPO may also work with creators of the Facebook group of the same name as the EPO profile in order to help minimize confusion between the two and to define who is the target audience for each. This will help to reach more members of the public on Facebook and create distinct communities for social networking for collaboration members and better serve the public with a tailored outreach community.

12.2 Blog squad

A subset of the EPO has taken on the task of periodically monitoring blogs that feature discussions on science or other blogs where LIGO may be discussed. The EPO also receive notifications from the collaboration when a blog inaccurately portrays the science being conducted by the collaboration. It is an accepted practice not to respond to those blogs that are irrationally critical of science in general (or a 'crackpot' blog) since there are many such blogs in existence and attention from LIGO may simply encourage such discussions.

When a blog entry is noted that should be responded to, the Blog Squad uses a standard statement that summarizes LIGO science and can be used for most purposes with slight modification:

> "LIGO (funded by the National Science Foundation), as well as other worldwide gravitational wave projects, is actively engaged in a scientific endeavor to search for the gravitational waves predicted by Einstein's general theory of relativity. We look for gravitational waves from a variety of astrophysical sources, such as coalescing binary neutron stars

and black holes. The nature of the gravitational waves is such that a detectable gravitational wave coming from a galactic or extra-galactic source requires an immense amount of energy (over one trillion, trillion gigatons of TNT). It is highly unlikely that detectable gravitational wave amplitudes could be produced from anything other than massive and large-scale astrophysical processes.

Your Name
Your Institution
LIGO Scientific Collaboration"

The Blog Squad maintains a list of blogs that are monitored periodically along with the template response on the EPO wiki at:

`http://www.ligo.org/students_teachers_public/social.php`.

12.3 Astronomy's New Messengers: An exhibit for the general public

One of the current major outreach efforts of the LSC is the 200 sq. ft. touring LIGO exhibit *Astronomy's New Messengers: Listening to the Universe with Gravitational Waves* [12] which is traveling to colleges, universities, museums and other public institutions throughout the United States. An extended approximately 1000 sq. ft. version of the exhibit will also be presented at the 2010 World Science Festival in New York City, alongside a signature event on the theme of gravitational-wave astronomy featuring high-profile keynote speakers and artists. *Astronomy's New Messengers* is a project funded by the National Science Foundation [11] through grant NSF-0852870 [2] from the Informal Science Education program, the EPSCOR program, and the Office of Multidisciplinary Activities (Program Manager: Kathleen V. McCloud, PHY Division of Physics, MPS Directorate for Mathematical & Physical Sciences). The project is managed by M. Cavaglià (Mississippi) with M. Hendry (Glasgow), S. Márka (Columbia), David Reitze (Florida) and Keith Riles (Michigan) serving as co-PI. *Astronomy's New Messengers* was designed and realized by Lee H. Skolnick Architecture + Design Partnership [14], a multi-disciplinary firm of architects, designers, and educators providing award-winning architecture and exhibit design services. Leni Schwendinger Light Projects [8], a NYC-based art studio which specializes in creating lighting environments for architectural and public spaces all over the world, designed and realized the artistic component of the 2010 exhibit. Members of the EPO working group, staff, graduate students and postdocs from various LSC institutions contributed to some degree to the concept development, exhibit's ancillary activities, and management.

Learning objectives and target audience

The learning objectives of *Astronomy's New Messengers* are to increase interest in, and understanding of, gravitational-wave astronomy and LIGO science. The target audience of the exhibit is an adolescent and young adult population of students, college age visitors, and informal learners. To attract this difficult audience, the exhibit includes possibilities for age-appropriate self exploration and a messaging that allows visitors to first discover their own excitement in the material, and then delve deeper into its complexity. To maximize the impact of the exhibit, and achieve these goals, the

design of *Astronomy's New Messengers* reproduces the physics and technology of the actual LIGO instrument in an eye-catching and entertaining way.

Design of the 2009 touring exhibit

Floorplan and elevation of the exhibit are shown in Figure 12.1 and 12.2, respectively. The exhibit's introductory area presents a general overview of the LIGO detectors and their science, while inviting visitors to step inside, explore and find out more. Text panels 12.3 and a large LCD screen with a looping high-quality video produced by Milde Marketing [10] for the International Year of Astronomy [4] cornerstone project "100 Hours of Astronomy" deliver key informational points (Figure 12.4, left.)

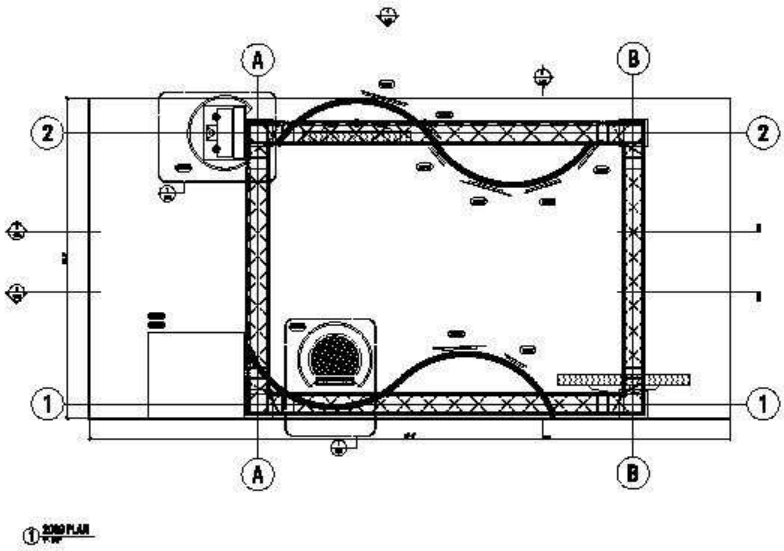

Figure 12.1: Floorplan of the 2009 LIGO Touring Exhibit. Design by Lee H. Skolnick Architecture + Design Partnership [14].

The main area of the exhibit explains how gravitational waves are generated by cataclysmic events in the distant universe, how LIGO "listens" for these events, and demonstrates how scientists decode their signals. Three interactive components engage visitors in discovering how LIGO operates and understanding some of the foundations of gravitational wave astronomy: a working and interactive laser interferometer, a grid-patterned rubber sheet to illustrate the curvature of space-time, and the black hole hunter game [5] kiosk. A second LCD screen with looping video compiled of clips from the NSF movie *Einstein's Messengers* [1] and several panels with photographs and diagrams further encourage visitors' interest in LIGO and the deep universe.

The interferometer model, constructed by the Ann Arbor Hands-On Museum [3] in collaboration with the Michigan LIGO group, intuitively shows visitors how an interferometer operates. A fringe pattern is projected on a screen, illustrating the concept of light interference and the effect of environmental noise. By tapping the interferometer case, visitors can disturb the fringe pattern. A photodiode at the output port of the interferometer measures the fringe variation and speakers produce a sound for an ultimate multi-sensory experience. Each key element of the interferometer is called-out and explained on a LCD screen. The concepts of space-time and of gravity as space-time curvature are illustrated with the rubber sheet interactive. Visitors can set a heavy steel ball on

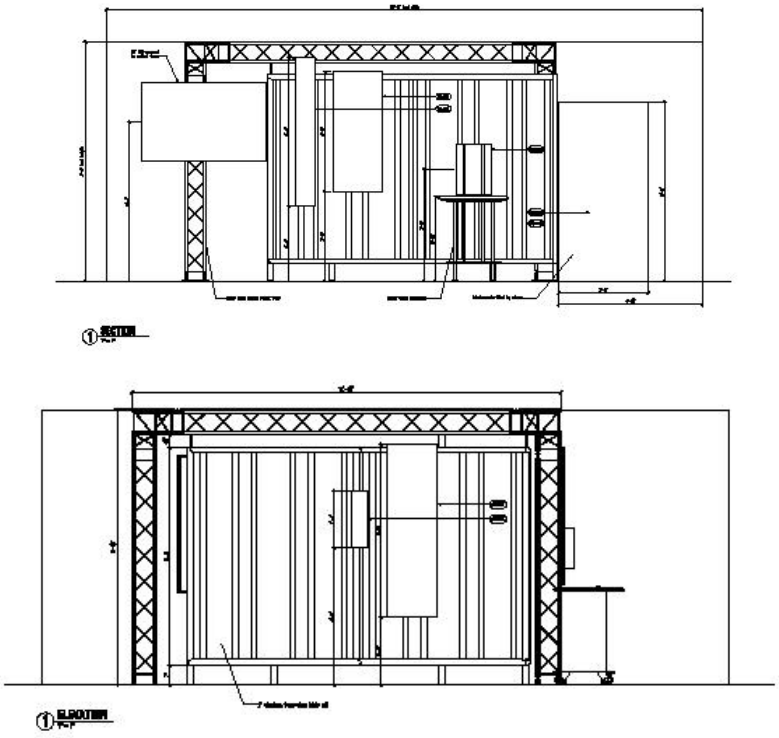

Figure 12.2: Elevation drawings of the 2009 LIGO Touring Exhibit. Design by Lee H. Skolnick Architecture + Design Partnership [14].

the sheet, which stretches the grid-patterned sheet around it. Rolling a second, smaller ball into the depression formed around the larger one, visitors can visually understand how space-time warps around massive objects and affects the motion of bodies in space. (Figure 12.4, right.) The purpose of the black hole hunter game, developed by Cardiff University, is to give visitors an opportunity to do (in a figurative sense) what LIGO scientists do, i.e. look for gravitational signals in noisy streams of data. Simulated gravitational-waves are translated into sound clips. Through a GUI interface on a computer screen, visitors try to detect recorded sounds of black hole events buried in different static noise clips. (Figure 12.5.)

Crucial to the design, integration and implementation of these elements was the collaboration between the LIGO Education and Public Outreach group and professional exhibit designers.

Exhibit's tour

Astronomy's New Messengers debuted at the World Science Festival's Street Fair in June 2009. The one-day event included over one hundred science and educational exhibitors such as the New York Hall of Science, Liberty Science Museum, PBS Kids, the New Scientist Magazine and was attended by over 150,000 visitors (WSF estimate). A partial list of exhibitors and their programs can be found at `http://www.worldsciencefestival.com/2009/street-fair.` The LIGO exhibit was given a prominent location in front of NYU Skirball Center by the organizers of the World Science Festival. This location allowed the LIGO exhibit to draw an unexpected number of visitors. Pictures of 'Astronomy's New Messengers' at the Street Fair can be found at

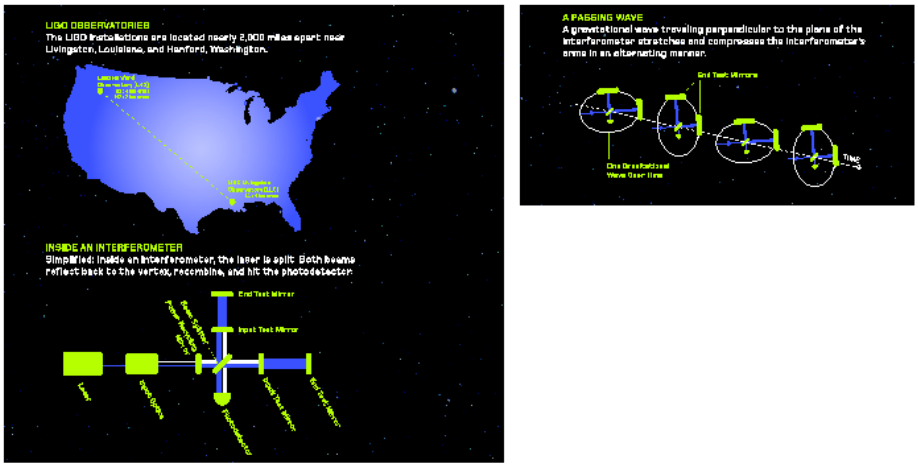

Figure 12.3: Example of graphic panels of the main area of the exhibit. Design by Lee H. Skolnick Architecture + Design Partnership [14].

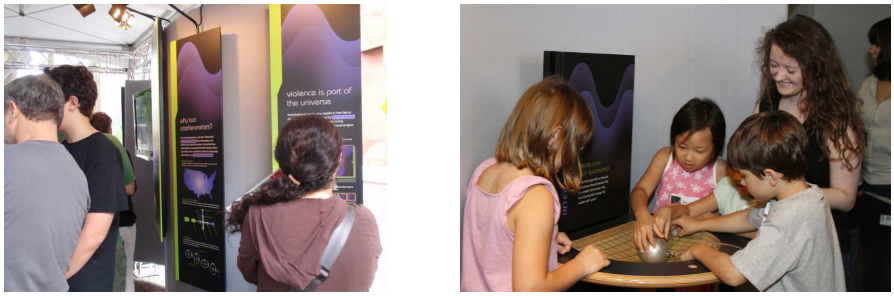

Figure 12.4: Visitors at the 2009 World Science Festival [15] browsing the exhibit graphic panels (left). K-12 after-school students at the University Museum, Oxford, Mississippi, simulating curved space-time with the rubber sheet interactive (right. Photo credit: Elizabeth Herren.)

`http://www.phy.olemiss.edu/LIGOexhibit/photogallery/WSF.html`. The LIGO exhibit was staffed full time by Marco Cavaglia, Martin Hendry and Szabolcs Marka, Michigan graduate student Evan Goetz, Rochester Institute of Technology graduate student Marcelo Ponce, University of Mississippi graduate student Brooke Rankins, and several students from Columbia University.

After the WSF, the exhibit moved to the Adler Planetarium in Chicago, where it was on display from July 10 to August 10, 2009. During its display at Adler Planetarium, the exhibit was staffed by a host of graduate students and post-docs from the LIGO group at Northwestern University under the direction of Dr. Vicky Kalogera. Adler Planetarium draws an average of 400,000 visitors each year (Adler Planetarium estimate). Although the actual number of visitors to Astronomy's New Messengers was not recorded, the LIGO exhibit was featured prominently in the Adler Planetarium and it is reasonable to assume that was seen by most of the Planetarium visitors in that period.

From September to November 2009, the LIGO exhibit was on display at several educational institutions in the southern states: The University of Mississippi Museum, Arkansas State University, Rhodes College, Agnes Scott College, the University of Florida, the University of South Alabama. These institutions were selected to maximize the impact of the exhibit in reaching to diverse groups (Agnes Scott College is a small liberal arts women's college, the University of South Alabama and

Figure 12.5: Playing with the black hole hunter game. The interferometer kiosk is in the background. Photo credits: Elizabeth Herren.

Arkansas State University are medium-size institutions in industrial and rural areas, respectively) as well as for their recruiting potential (Rhodes College and the University of Florida).

In December and early January, during college winter breaks, Astronomy's New Messengers was displayed in the lobby of the LIGO Science Outreach Center in Livingston, LA, where it attracted occasional visitors to the center and school tours and was staffed by local personnel. The exhibit tour concluded in early 2010 in Louisiana (planned locations are Louisiana Tech University and Southeastern Louisiana University) thus maximizing the geographic impact of the first phase of the project. A request for a supplemental grant has been submitted to NSF with the aim of extending the lifespan of the exhibit. Depending on the securing of supplemental funds, the exhibit may be displayed at institutions located in other regions of the United States and used as a recruiting tool at major national science job fairs.

All exhibit displays with the exception of displays at the World Science Festival, Adler Planetarium and LIGO Science Outreach Center were inaugurated by well-attended public lectures and other outreach companion activities such as after-school activities with K-12 kids, tours of teachers and students from local middle and high schools, a companion concert 'Einstein's Cosmic Messengers' by internationally acclaimed composer and percussionist Andrea Centazzo.(Event sponsored by the University of Florida through Dr. Reitze.)

Educational material was also developed. Specifically, in addition to the powerpoint presentations for the public lectures, it was created an exhibit web page and two companion three-fold brochures, which explain the LIGO experiment and the various interactive components of the exhibit. These brochures were distributed to visitors during the exhibit displays. A signature cotton 'Black Hole Hunter' T-shirt was also designed and produced. Several hundreds of them were given away to visitors during the exhibit displays at various locations. They were also given to student helpers and used as a prize for kids playing the black hole hunter game. The T-shirt design consist of a graphical simulation of two colliding black holes and gravitational-wave emission on the front, and the url of the new LIGO web site, www.ligo.org, on the back.

Evaluation

The LIGO exhibit was well received and had a very positive impact on its audience. The Black Hole Hunter game is certainly a hit, in particular with kids and young adults. The interactive interferometer with its red laser beam is also very popular with visitors, as well as the rubber sheet interactive which illustrates the curvature of space-time.

The effectiveness of 'Astronomy's New Messengers' was evaluated through a survey which was administered to visitors. The evaluation was performed by the Center of Educational Research and Evaluation of the University of Mississippi. The results of the study confirm that [quote] 'the touring LIGO exhibit was well received at the majority of sites where it was displayed.' [end quote] Approximately 80% of the respondents to the survey stated that the exhibit helped them 'very much' or 'some' to understand what is LIGO and how it works, and what are gravitational waves. Over 70% of the respondents stated that the exhibit increased their interest in science and 'agree' or 'strongly agree' that the government should spend money on projects like LIGO. Although comments were not solicited in the survey, several written comments by respondents will help in further improving the exhibit and its impact on the public.

Cavaglia also worked in close contact with Bernard Whiting and Guido Mueller to advertise the University of Florida International REU program (see below). Brochures of this REU program were put on display at the exhibit venues and distributed at the public lectures. To date, this collaborative effort resulted in at least one application from Rhodes College to the Florida REU.

A Large-scale exhibit for the 2010 World Science Festival

Phase II of the project envisages the design and construction of a large-scale, interactive exhibit, which will draw upon elements of the touring exhibit (and upon lessons learned from the former's evaluation) 12.6. The large-scale exhibit will blend LIGO science with high-concept artwork through incorporation of an interpretive 3-D lighting display. This large-scale exhibit is scheduled to debut at a prominent public location at the 2010 World Science Festival in New York City. After the 2010 Festival, the exhibit will be transferred to a permanent home in a public institution or science museum.

The large-scale exhibit will incorporate elements from the touring exhibit, but on a grander scale – e.g. using larger flatscreen displays and poster boards and including a larger table-top interactive interferometer. The interferometer was designed and is being constructed by Grant Meadors (graduate student) and Keith Riles (PI) of the Michigan Gravitational Wave Group. A key additional element of the large-scale exhibit will be the blending of the table-top interferometer with a major, high-concept work of art in the form of an interactive three-dimensional lighting display suspended from the ceiling, symbolizing the Universe above the Earth 12.7. This artwork will be easily visible from afar and its distinctive appearance will be instrumental in drawing visitors towards the exhibit. Sounds from visitors and audio templates of binary inspirals, pulsars, bursts and the stochastic background will be translated and displayed on a spatial field of strands of diodes, creating a dazzling show of light and sound in real time, representing the everlasting link between Earth and the Universe. This will allow visitors to be exposed to the science at the basis of LIGO research in an exciting and visually stunning manner.

A MOU with the WSF has been signed to organize a complementary interdisciplinary signature event at the 2010 Festival, on the theme of gravitational-wave astronomy and featuring high-profile keynote speakers and artists. The WSF, an annual high-profile science festival in New York City,

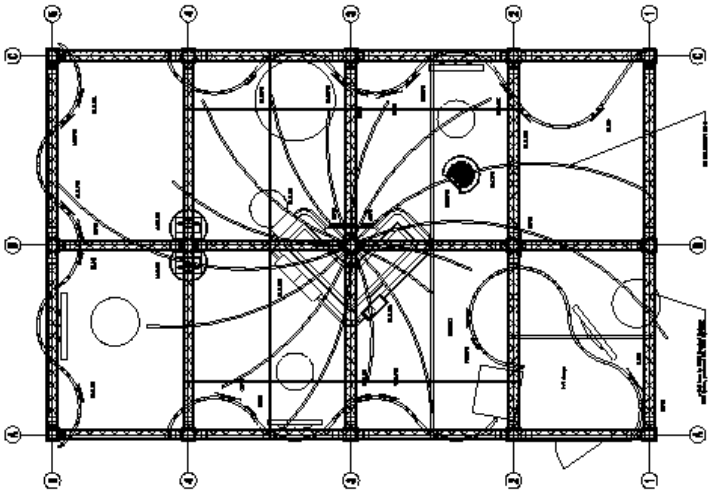

Figure 12.6: Floorplan of the 2010 LIGO Exhibit. The table top interferometer is at the center. The spiral patterns are the strands of diodes suspended from the ceiling. Design by Lee H. Skolnick Architecture + Design Partnership [14] and Leni Schwendinger Light Projects [8].

presents an ideal outreach opportunity for the proposed outreach activities. The Festival brings to this partnership professional event production capacities, Festival media partners that can be counted on to promote effectively the public presentations and a marketing strategy that will position the LIGO event and associated WSF activities for maximal impact. Signature events are highly produced and take place at prime venues such as New York University's Skirball Theater, CUNY's Segal Theater, and Columbia University's Miller Theater. They feature top-tier participants and moderators. They also include custom-produced video segments that are produced by the Festival with support from partners such as NOVA/NOVA ScienceNow. A customized teacher's kit, which include lesson plans, source material, and suggestions for classroom activities on LIGO is currently in preparation in partnership with the WSF, the New York City Department of Education and the New York State Department of Education. Activities during the WSF will have the potential to reach a much wider audience beyond the NYC metropolitan area. The partnership with the WSF will open up the possibility of publicizing the proposed activities to a significant nationwide audience.

12.4 Can't you see it? It's a Black Hole!

Every year the Center for Computational Relativity and Gravitation (CCRG) RIT showcases their work at the ImagineRIT festival [13]. In May 2010 CCRG will present the exhibit *Can't you see it? It's a Black Hole!*. The purpose of this exhibit is to use hands-on demonstrations to show that black holes can be seen by the way they distort the universe around them. *Can't you see it? It's a Black Hole!* will show how black holes bend light and act like gigantic lenses, how these lenses change the way stars and even whole galaxies appear, and how lasers and mirrors on earth, and even in outer space, are used to detect the ripples in space and time made by colliding black holes. The exhibit will consist of multiple interactive components and a presentation explaining the research being done at CCRG. The first component of the exhibit is a computer game which allows visitors to shoot down alien spaceships with a laser gravitationally lensed by a black hole. This game is suitable for

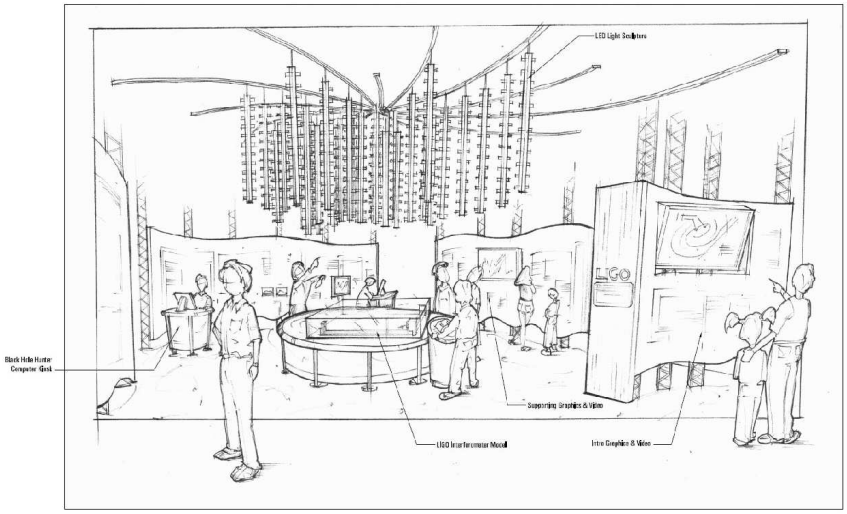

Figure 12.7: Artist rendition of the 2010 LIGO Exhibit. Design by Lee H. Skolnick Architecture + Design Partnership [14] and Leni Schwendinger Light Projects [8].

children ages 6 to 12 and teaches younger children how strong gravity can deflect light. In the second component of the exhibit, presenters will take pictures of visitors and show them how they would look to someone else if there was a black hole present. This component is tailored to older children and adults. It will show them how image distortion affects the way we see the universe. The third component of the exhibit consists of a tabletop laser interferometer showing how gravitational-wave detectors really work and how lasers can be used to measure the effect of gravitational waves. This component is also tailored to an audience of older children and adults. A new multimedia presentation that describes the physics behind the above exhibits and explains why CCRG research is important in understanding the universe will also be part of the exhibit. This presentation will use both still slides and movies to explain how gravity affects the universe.

12.5 Multimedia and web-based outreach

The ligo.org website

Most of the web-based outreach of the LSC relies on the ligo.org web site (`http://www.ligo.org`) and the LIGO Lab web site (`http://www.ligo.caltech.edu`). On June 12, 2009, the ligo.org website was redesigned and streamlined through the efforts of the LSC Web Committee (`lsc-webcomm@ligo.org`) chaired by Ben Owen. The web site is targeted mainly to a general audience but it contains a LSC/Internal link to the LSC TWiki with useful information for LSC members. A ligo.org sandbox

`http://www.lsc-group.phys.uwm.edu/webcommphp/index.php`

is used by the LSC Web Committee to update content before roll out. The ligo.org sandbox is only viewable by the LSC but not by the general public.

The ligo.org portal contains links to subpages with topics of interest for the general public: “news”, “science” (a layman introduction to LIGO & gravitational waves), “students/teachers/public (information and resources regarding LIGO and gravitational waves of special interest to students and teachers), “multimedia” (a collection of videos, images and sounds), “partners” (links to other

gravitational-wave experiments and collaborations), and "about" (a short introduction of the LSC). The site map is listed below:

- LSC home page
- LIGO Lab
- Community/environment
- LSC/internal
  - News: Latest news
    - Latest news
    - Upcoming events
    - Press releases
    - Blog
  - Science: Introduction to LIGO and gravitational waves
    - Introduction
      - Introduction to LIGO and gravitational waves: Introduction
      - Introduction to LIGO and gravitational waves: Newton, Einstein and gravitational waves
      - Introduction to LIGO and gravitational waves: "Ripples on Space-Time"
      - Introduction to LIGO and gravitational waves: Sources of gravitational waves
      - Introduction to LIGO and gravitational waves: Continuous gravitational waves
      - Introduction to LIGO and gravitational waves: Inspiral gravitational waves
      - Introduction to LIGO and gravitational waves: Burst gravitational waves
      - Introduction to LIGO and gravitational waves: Stochastic gravitational waves
      - Introduction to LIGO and gravitational waves: Detecting gravitational waves
      - Introduction to LIGO and gravitational waves: Using multiple detectors
      - Introduction to LIGO and gravitational waves: An interferometer
      - Introduction to LIGO and gravitational waves: LIGO's interferometer
      - Introduction to LIGO and gravitational waves: The potential of gravitational waves
    - Popular articles
    - LSC scientific publications
  - Students/Teachers/Public: LIGO information and resources
    - Students
    - Teachers
    - Public
  - Multimedia
    - Images
      - Image gallery: LIGO Hanford Observatory
      - Image gallery: LIGO Livingston Observatory
      - Image gallery: Astrophysical sources
      - Image gallery: Lasers
      - Image gallery: Optics
      - Image gallery: People at work
      - Image gallery: Seismic isolation

        - Image gallery: Vacuum envelope
    - Videos
    - Sounds
  - Partners: Partner experiments and collaborations
    - GEO
    - Virgo
    - LCGT
    - LISA
  - About
    - Charter
    - Bylaws
    - Member institutions
    - Membership directory
    - Research white papers
    - LSC/internal

- Funding acknowledgments
- Contact information
- Legal
- Credits

An effort is currently underway to create a Spanish version mirror of the ligo.org web site.

Space Place

The Space Place effort is a set of intertwined products and partnerships with a nationwide reach. NASA's Space Place has a website (http://spaceplace.nasa.gov) in both English and Spanish for elementary school kids, their parents, and their teachers, with interactive games, projects, and amazing facts. Informal surveys at teacher conferences have found that about half the teachers have heard of or have used the website. Over 50 different NASA missions are represented on the website.

Space Place makes a real effort to tailor its content to this young audience, and to reach out to diverse communities (such as native Spanish speakers). Examples of Space Place products are the Black Hole Rescue Game at http://spaceplace.nasa.gov/en/kids/blackhole, and the Cosmic Viewer at http://spaceplace.nasa.gov.

As part of the website, Space Place also produces "Space Place Live!" a cartoon talk show, featuring interviews of renowned scientists, such as Michelle Thaller of the Spitzer mission and Kip Thorne of LISA. (Go to (http://spaceplace.nasa.gov/en/kids/live and click on "Meet Michelle Thaller" or "Meet Kip Thorne.") These "episodes" are also carried on NASA TV.

Space Place has partnerships with over 30 newspapers, each of which runs a monthly Space Place column on its kids page. Space Place also works with over 250 amateur astronomy clubs across the country, each of which receives an original monthly column for their newsletter and/or website. Space Place collaborates with over 350 museums and planetariums in the U.S., each of which has a Space Place bulletin board type display where they feature NASA's latest paper products, sent to them monthly.

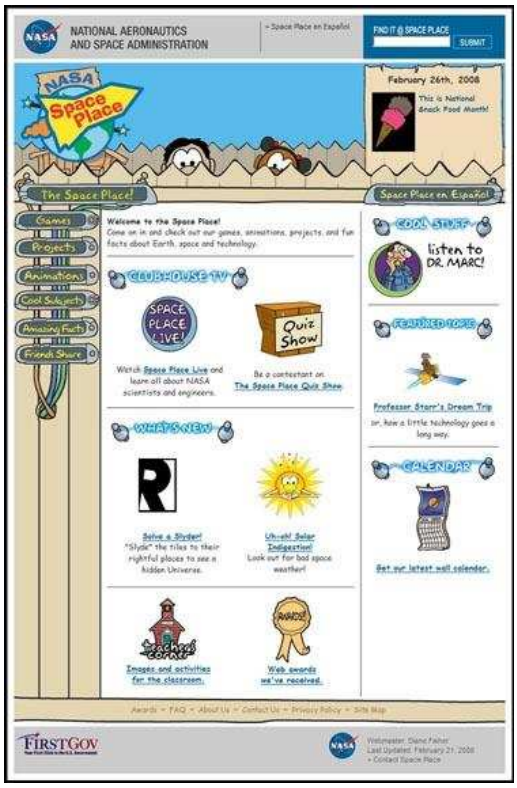

Figure 12.8: Screenshot of The Space Place home page. In upper right corner is the Fact of the Day, which links to one of the activities or fun facts on the site.

Nancy J. Leon, Space Place team leader, is working with Cavaglia and EPO members to create more visibility for the LIGO experiment on Space Place, and to reach this young audience, as well as the large audience represented by their partnerships. Funding for this project have been secured through a supplemental award to the current award of the UMISS group. A design and creation of a "LIGO Amazing Fact" and ancillary products, including a kids' newspaper article and an astronomy club column is being planned. If funding permits, a Spanish language version of the LIGO material on the Space Place website will be produced to reach diverse and underserved communities. This effort would complement the current effort of the LSC Web Committee.

Outreach activities with EVO

The possibility of using EVO [6] for outreach activities has recently being considered by the EPO group. A working group which includes members of the LSC (M. Cavaglia, N. Christensen), the LIGO Lab (D. Ingram, K. Blackburn) and EVO developers (K. Cecire and P. Galvez) is currently planning a EVO webcast tailored to high-school students on the occasion of Laserfest [7].

12.6 Einstein@home

Einstein@Home (`http://www.einsteinathome.org`) is a World Year of Physics 2005 and an International Year of Astronomy 2009 project supported by the American Physical Society (APS) and by

Figure 12.9: Screenshot of the "Black Hole Rescue Game," Spanish version.

Figure 12.10: Meet Kip Thorne!

a number of international organizations. Einstein@Home uses computer time donated by computer owners all over the world to search for gravitational waves from spinning neutron stars using data from LIGO and GEO600. It also searches for radio pulsars in binary systems, using data from the Arecibo Observatory in Puerto Rico. Einstein@Home is now carrying out a search of data from LIGO's S5 run. The current analysis (S5R5/6) uses 5280 hours of data from the later (and most sensitive) part of S5.

Participants in Einstein@Home can download software to their computers that receives data from a central server. The software process gravitational wave data when not being used for other computer applications, like word processors or games. Then, the computers send the processed data back to the server and can get more to analyze. Einstein@Home does not affect the performance of computers and greatly speeds up this exciting research. Einstein@Home is available for Windows, Linux and Macintosh OS X platforms.

Bruce Allen from the University of Wisconsin - Milwaukee developed the Einstein@Home project. Einstein@Home is based on SETI@Home, a similar program looking for signs of extraterrestrial life in data from the radio telescope at Arecibo Observatory. The pioneering developer of SETI@Home, David Anderson, is helping with Einstein@Home.

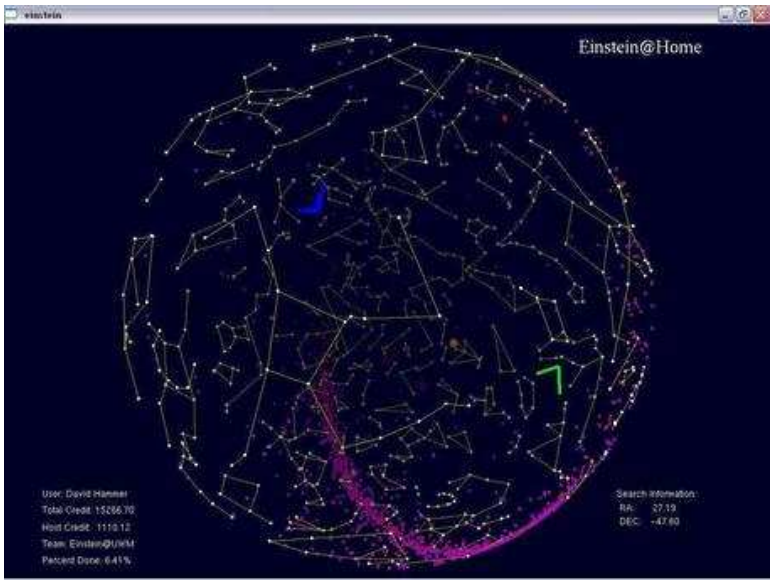

Figure 12.11: The Einstein@Home screensaver.

12.7 Schools and conferences

Since 2005, the University of Texas at Brownsville and its Center for Gravitational Wave Astronomy has hosted a Gravitational Wave Astronomy Summer School in South Padre Island, TX. The school offers approximately 25 graduate and undergraduate students a two-week intensive program covering the basics of gravitational wave interferometry: an introduction to general relativity, the astrophysics of gravitational wave sources, data analysis, and detector instrumentation. The school also offers scholarships for travel, accommodations, and per diem expenses.

Marco Cavaglia of the University of Mississippi represented LSC outreach efforts at the 2008 Annual Meeting of the Astronomical Society of the Pacific in St. Louis, MO. He submitted a poster and proceedings note entitled "Gravitational-wave Astronomy: Opening a New Window on the Universe for Students, Educators and the Public," detailing the educational efforts at the LIGO observatories, collaborations with artists and musicians, and the Einstein@Home project.

12.8 Student recruitment

A primary avenue for recruitment into the gravitational-wave community is the opportunity for undergraduate research. Many LSC members involve students in their research programs, particularly at undergraduate-only universities such as Carleton College or Trinity University. Caltech hosts a summer research program funded in part through the National Science Foundation's Research Experiences for Undergraduates (REU) program. In 2009, thirty undergraduates pursued ten-week research projects at the LIGO observatories or at Caltech, on subjects including data analysis, detector modeling, and experimental work on subsystems such as silica fiber suspensions. Another NSF-sponsored effort is the University of Florida's International REU in Gravitational Physics program. Over the past three years, 32 undergraduates from the United States have participated in summer research projects at gravitational physics laboratories in Australia, England, France, Germany, Italy,

Japan, Scotland, and Wales.

The LSC was also represented by an exhibitor's booth at the Sigma Pi Sigma Quadrennial Congress at the Fermi National Accelerator Laboratory in Batavia, IL, in November 2008. Over 600 students, alumni, and faculty attended this conference of the national physics honor society. Booth staffers included Tiffany Summerscales of Andrews University and Ilya Mandel of Northwestern University.

12.9 REU programs

The Research Experience for Undergraduates (REU) program of the National Science Foundation (NSF) was established to provide undergraduate students the opportunity to participate in summer research programs and to establish scientific contacts outside of their own department. It targets especially students from smaller colleges and minority students which often don't have the research possibilities large research universities can provide to their students. Most REU awards are given to renowned national Universities to host between 10 and 20 students each summer. A few international REU (IREU) awards are given to Universities to send a similar number of students to large scale international research facilities such as CERN.

UF IREU on gravitational physics

Bernard Whiting and Guido Mueller (both University of Florida) operate the International REU in the field of Gravitational Physics as part of their commitment to the LIGO Science Collaboration and the international field of gravitational research in general. The goal of the IREUs adds an international component which allows the students to learn also about the growing internationalization of research and to establish scientific contacts beyond the borders of the United States.

Initial motivation and early history of the UF IREU

Initially suggested by Beverly Berger (NSF) at the LSC meeting in Hannover in 2003 as a way to offer students and their advisors from smaller LSC institutions opportunities to collaborate with our partners in Europe, Australia, and Japan, Guido Mueller explored the possibility to send one student to work with Jim Hough and Sheila Rowan at the University of Glasgow and one student to work with Benno Willke and Maik Frede at the Albert Einstein Institute and the Laser Zentrum in Hannover. Both groups graciously accepted to host our two students in the summer of 2004 and NSF funded this as part of a supplement to our main research grant. Both students were UF students and both research projects fitted nicely into our general research endeavor somewhat contrary to the motivation behind NSFs REU program as the UF group is hardly one of the smaller LSC institutions. However, it allowed us to gain experience with the organization such as required health insurance, housing, and potential VISA issues without having to select students based on paper applications. For the following year, we worked together with David Blair (UWA/Gingin) and David McClelland (ANU) and send again two UF-students and one student from Trinity College (Dennis Ugolini's group) to ANU and Gingin. This was again supported by a supplement to our research grant. After these two 'test- runs' Guido Mueller asked Bernard Whiting to join him in the organization and to finally submit a proposal for an official International REU site. This proposal was turned down and NSF supported again one UF student to work for Andreas Freise in Birmingham and one student from

Embry-Riddle University (Andri Gretarsson's group) to go to Glasgow using supplemental funding to our research grants before our second proposal was finally approved.

The International REU

The International REU for Gravitation sent initially 3 students to Gingin, one student to Canberra and one student to Hannover. These students were all from smaller colleges such as Simmons College or California State University in Dominguez Hills or minority serving institutions such as the University of Puerto Rico. It was a particularly successful year in the sense that two of the students are now graduate students in Australia(!) and one student entered our own graduate program here at UF.

Starting in 2008, we also included the US-students which participate in the LIGO-VIRGO undergraduate student exchange program. This program was independently started by Riccardo DaSilva (California Institute of Technology). However, as most of the organizational tasks and problems for sending US-students to VIRGO are identical to the problems we face sending students to our initial LSC partners abroad, it was reasonable to combine these parts of both programs; Riccardo is still managing the Italian students visiting the US. This, the fact that the costs per student are actually lower than initially expected, and that we were always able to find hosts allowed us to accept 12(!) students in 2008 and 15(!) in 2009.

Although every application will be looked at individually, we have a strong preference for applications from within the LSC and so far we have never turned down any application from within the LSC if it was submitted in time (best before the holidays start in December) and supported by an LSC member. However, the number of applications from within the LSC is always around 3-5 and most students are not connected to the LSC or any other gravitational research program such as LISA. As with all REUs, NSF urges us to select minority and female students as well as students from smaller colleges first before accepting applications from majority students from major research universities. The fact that many of our students are still majority students from places such as Princeton or the University of Southern California shows that we still need more help to recruit students which fit our preferred profile. It might be argued that this gives us a chance to attract highly talented students to our specific field of research; however, the yield among these students is very very low. It is simply not working as well as hoped.

At this point we would like to thank all our hosts for their willingness to provide research opportunities, organize housing, and their patience working with us and the students to make all this work. I also want to point out that we have many more hosts now than we have funding for students or timely applications. We occasionally hear complains that our deadline is too early and we should move it back into February, the typical deadline for other national REUs. However, the organization of hosts, projects, housing, VISA, the briefing meeting at UF, and many other little things for an international REU with many different hosts spread across the entire globe requires much more time initially (and much less later over the summer).

Table 12.1 shows the various hosts and home institutions of the students in the years 2007-09. The entire program including application procedures and schedules can be found at

`http://www.phys.ufl.edu/ireu.`

The website also contains links to past projects and many pictures taken by the students during their IREU experience.

2007

International Host	Home Institution
Gingin/UWA	Simmons College
	San Jose State University
	Cal. St. Uni., Dominguez Hills
ANU Canberra	Andrews University
AEI Hannover	University of Puerto Rico

2008

International Host	Home Institution
University of Sannio	Rice University
VIRGO, Cascina	University of Southern Cal.
	University of Rochester
	University of Virginia
Cardiff University	Duke University
	Rochester Inst. of Tech.
AEI Hannover	University of Florida
	Trinity College
NAOJ, Tokyo	Penn State
	Southeastern Louisiana U.
University of Glasgow	Embry Riddle University
	Southeastern Louisiana U.

2009

International Host	Home Institution
University of Paris	Princeton
Naples	New College of Florida
	Bucknell
Cardiff	Reed College
	Berkeley
AEI, Hannover	University of Florida
	Univ. of Illinois
	Notre Dame
Glasgow	Wisconsin
	Indiana University
Birmingham	Rochester
VIRGO, Cascina	Illinois Wesleyan University
	Eastern Kentucky University
ANU	UMass
Benevento	Evansville

Table 12.1: 2007-09 hosts and home institutions of the UF IREU

RIT REU program

The Computer Science (CS) Department at RIT has an active REU grant (2009-2011). A diverse group of ten qualified students were recruited for this interdisciplinary REU. One recruitment criteria was not to recruit students from ivy league schools, because it was assumed that students from these schools have ample opportunity to engage in research activities. RIT accepted students who showed great potential, but had little opportunity to prove themselves. The CS faculty at Rochester Institute of Technology established several interdisciplinary research programs. The Spiegel project is a collaborative effort between the Center for Computational Relativity and Gravitation (CCRG) and the CS Department to analyze and visualize the simulation of galactic events such as the formation of galactic nuclei and supermassive black hole mergers. The goal of the RIT REU program is to provide an interdisciplinary research environment for a group of students. The students conduct research in the areas of distributed high performance file systems, data visualization and data sonification. Each team is guided by one or two faculty members of the CS Department, and is introduced to astrophysics by members of CCRG.

Background

In scientific computing, the ability to create effective visualizations is vital as it leads to a greater understanding of the data under scrutiny and is extremely useful for outreach activities. Spiegel is a distributed visualization framework designed to handle extremely large multi-dimensional data sets. Spiegel employs a data flow model which allows the system to be easily extended. A visualization program in Spiegel comprises a set of simple components that are connected together through communication endpoints. Each component performs some specific task such as reading data, data, filtering data to extract or compute certain attributes, or creating a visual representation of the data. The students were carefully selected from the pool of qualified students. Nevertheless it was very difficult to access the abilities of the students. The faculty selected research projects that could be scaled up or down in scope in order to tailor them to the students abilities.

Project 1: RenderMan to the Rescue

Traditionally, the Spiegel framework used Java3D or JOGL to create the final rendered images. These libraries rely on a fixed pipeline approach and are unable to create the eye-catching visuals that are commonplace in movies. Three students conducted research to add RenderMan to Spiegel. They explored how to generate RenderMan Interface Bytestream files (RIB) and shaders. A paper titled "RenderMan's Power to Visualization's Rescue" written by Julio Espinal, Virginia Allen, Kwesi Amable, Reynold Bailey, and Hans-Peter Bischof will appear at the 18th International Conference on Computer Graphics, Visualization and Computer Vision, 2010. Julio Espinal will present the paper at the conference in February 2010.

Project 2: Sonification

The addition of audio to animations or videos would greatly enhance the viewer's experience and often leads to a greater understanding of the data or scenes under scrutiny. Two students evaluated how well these and other data-driven audio synthesis techniques scale to handle very large physically based data sets.

The students developed a system that converts simulation data to spatial sound and combines audio and video streams. They conducted a survey in order to determine if the addition of these audio streams improved the understanding of the data. The participants of the survey included members of CCRG, CS faculty, REU fellows, and RIT students. Their discoveries showed that adding spatial audio significantly enhances the visualization of the data.

Project 3: High Performance File Systems

Simulations of galactic phenomena such as colliding black holes that produce gravitational waves can produces data in the order of terabytes. To access and process these large-scale data sets rapidly and securely requires efficient management schemes for storing, retrieving, and modifying data. High performance file systems that support efficient data management include HDF5, PVFS, and Google File System. These file systems are designed to be general purpose, and are not optimized for the special-purpose data structures used in Spiegel.

Four students conducted research to try to remedy this problem. They explored the strengths and weaknesses of existing file systems and implemented improved algorithms and data structures. The students developed a distributed high performance file system.

A paper titled "A High Performance File System Using Commodity Hardware for Scientific Visualization" by Kyle Dewey, Aaron Menezes-Pinto, Loren Abrams, Richard DeFrancisco, Minseok Kwon and Rajendra Raj was accepted to the 5th IEEE International Conference on e-Science, Oxford, UK, Dec 2009. However, due to last minute personal reasons, Kyle Dewey was unable to present at the conference.

Project 4: FlyPath Editor

It must be possible to move a camera in space in time through the simulation date in order to create an impressive movie for show and tell. This is the equivalent of a camera when a "real" movie is filmed. We extended our research program to include one student from the RIT/Louis Stokes Alliances for Minority Participation (LSAMP) program. He partnered with one of our participating REU students to study techniques from the film industry and implement a fully functioning fly path editor.

Lessons learned and future plans

Student exit interviews allowed REU organizers to get an inkling that most students enjoyed this experience much better than expected although it is too early to say whether the participating students will continue with graduate studies. Future plans include adding an international component to the REU by exploiting RIT's strong relationships with scientists in Germany and other European counties.

12.10 Diversity programs

EPO Diversity Committee

The EPO Diversity Committee was formed in 2009 with the purpose of increasing the demographics of under-represented groups in the LSC, assess current status of diversity initiatives, and help in the expansion of current programs and the creation of new ones. The LSC Diversity Committee interacts closely with the LIGO Lab Diversity Committee, chaired by Fred Raab, for the development of

diversity initiatives within the collaboration. A survey is currently being developed to establish member perceptions of the climate within the LSC due to other people's demographics (ethnicity, gender, sexual identity, disability, ...) and acquire and record information about diversity programs among the LSC member institutions.

RIT program for deaf and hard-of-hearing students

Through a collaboration involving scientists, artists and educators, members of the gravitational astrophysics program and the National Technical Institute for the Deaf (NTID) at the Rochester Institute of Technology (RIT) propose a unique development project for Communicating Research to Public Audiences (CRPA). The project uses dance and multi-media theatre techniques to expose a broad audience, about half of which is comprised of deaf and hard-of-hearing students enrolled in grades 5-12, to an aesthetic, educational performance representing the merger of black holes and other astrophysical compact objects, such as neutron stars. The performance is highly visual and accessible to all audience members. Deaf and hard-of-hearing students rely heavily on visual communication for learning and gaining access to information. In this regard, dance is a kinesthetic and visual experience that is fully accessible to the entire audience and helps facilitate learning and the development of nonlinguistic representations of concepts. The team includes Manuela Campanelli (PI) Thomas Warfield, Joseph Bochner, Hans-Peter Bischof (co-PIs)

12.11 Deliverables

Keith Riles and Ramon Armen of the University of Michigan developed a permanent interferometry exhibit for the Ann Arbor Hands-On Museum in Ann Arbor, MI. The supporting educational materials include a flash player demonstration covering gravitational waves, interferometry, and LIGO. The completed interferometer was prominently mentioned by Exhibit Director John Bowditch in the museum's 2008 annual report. Keith Riles now serves on the museum's Board of Trustees, and has received positive feedback on developing more LIGO-related materials. The exhibit served as a model in developing the traveling interferometer kiosk for the 2009 World Science Festival. Members of the GEO 600 collaboration contributed another interferometry exhibit to the Royal Society 2008 Summer Science Exhibition. Entitled "Can you hear black holes collide?," the exhibit included a hands-on interferometer, the "Black Hole Hunter" computer game, mobile phone ringtones of gravitational waveforms, and a movie on gravitational-wave astronomy.

LSC members also contribute software deliverables, in the forms of digital videos and animations. The GEO 600 collaboration worked with Milde Marketing to produce a series of video interviews on black holes, which are currently hosted at http://www.scienceface.org. The collaboration also produced high-quality animations of a black hole merger for their Royal Society Summer Science Exhibition entry; these animations are now hosted in the Albert Einstein Institute multimedia archive at http://numrel.aei.mpg.de/Visualisations/. Another visualization outreach effort comes from the Center for Computational Relativity and Gravitation at the Rochester Institute of Technology. Their download archive at http://ccrg.rit.edu/downloads includes black hole merger waveforms generated by Manuela Campanelli, Carlos Lousto, and Yosef Zlochower, with accompanying animated movies created by Hans-Peter Bischof.

12.12 Relationship to other existing astronomy outreach

AIGO's Gravity Discovery Centre

The Gravity Discovery Centre, operated by the GDC Foundation is an independent non-profit facility set up at the instigation of the WA Government to provide education resources to complement the Australian International Gravitational Observatory (AIGO) Research Centre at a location 80km north of Perth CBD. It was set up through a major fundraising process that led to a total investment of more than $10m.

The GDC was designed to be a learning centre that focussed on modern physics, astronomy and biodiversity. It was funded mainly through private sector donations. In parallel with the development of the buildings and exhibitions the Gravity Discovery Centre Foundation worked with a group of talented and dedicated school teachers to develop education programs linked to exhibits. Stage 1 of the GDC was opened in 2003 and Stage II in 2008. It is now a large scale facility containing more than 2000 square meters of exhibits, displays and educational resources. It is located beside the AIGO Research Facility where up to 20 research personnel conduct large scale experiments with high power lasers, all related to the discovery of gravitational waves, a new spectrum of radiation expected to allow humanity to listen to the gravitational "sounds" of black holes and the big bang.

The facilities of the GDC include a large public astronomy centre (Gingin Observatory) , the new state of the art robotic Zadko telescope owned by UWA, a 20m pendulum tower, a 1km scale model of the solar system, the Leaning Tower of Gingin, (a 45m steel tower for students to do free fall experiments), and research laboratories available for student visits. The main GDC buildings include four large scale galleries

1. The Discovery Gallery: discovering gravity, and the other fundamental forces of the universe, the links between space and time, and the links between time and gravity.

2. The Innovation Gallery: examples of local innovations and inventions: displays organised in cooperation with local high technology businesses.

3. The Cosmology Gallery: exhibitions on the origin of the universe including a 60m timeline of the universe from the big bang to life on earth, including exhibits of meteorites, minerals and fossils and also including cultural cosmology with large scale artworks depicting creation stories from indigenous culture and world religions.

4. The Biodiversity Gallery which focuses on the unique and extraordinary diversity and specialisations of plants and invertebrates on the 50km^2 pristine bushland of the Gravity Centre.

The GDC currently has 20,000 visitors per annum, half of which are school groups from WA and SE Asia, who undertake curriculum related enrichment programs. The Gravity Discovery Centre is unique and innovative. It combines art with science, real research with learning modules linked to large scale facilities such as the Leaning Tower and the Pendulum Tower, and cosmology linked to astronomy, geology, paleontology and traditional cultural beliefs. The founders of the GDC won the Prime Minister's Eureka Prize for Promoting Science. It was written up in Nature July 10, 2008.

Completed activities since 2008-09 MOU report and future activities

Accomplishments of GDC in the last year include:

1. A public lecture "Einstein's Relativity" at professional development day for Victorian high-school teachers with approximately 150 attendees;

2. Two public lectures "The Dark Side of the Universe" about gravitational waves astrophysics for Western Australian high-school teachers and general public with approximately 300 attendees;

3. A keynote address on "Dark Matter and Gravitation" at the Victorian Physics Teachers' Annual Conference; approx 250 attendees;

4. Workshop on "The Age of Things" at Victorian community group and refugee support centre;

5. A 6 minute video about gravitational waves, *Listening to the Dark Side of the Universe: The AIGO Project*. This video has been highly acclaimed and is now available from the AIGO Project webpage `www.aigo.org.au` and also is on Youtube. Cinema definition copies are available in DVD format. The Video was sponsored by STM Duraduct, a stainless stell vacuum pipe manufacturer interested in the AIGO project

6. Shaun Hooper from UWA created a musical composition: *The Black Hole Orchestra* which combines many sounds from pulsars, CBC sources, bar mode spindowns and black hole normal modes in a short appealing composition suitable for public lectures and freely available from `www.aigo.org.au`.

Planned activities includes:

1. Prepare Q and A and discussion points document for classroom use to accompany the AIGO video produced by the University of Western Australia;

2. Incorporate AIGO video into Melbourne University Science Faculty Blog;

3. Liaise with Victorian curriculum authority on entry of relativity into the national secondary school curriculum;

4. Enter Melbourne PhD student in Fresh Science competition to develop media skills.

13 Needs and future plans

The LSC EPO working group is an international network of scientists interested in public outreach. By combining different ideas and approaches across many institutions, EPO members are able to create outreach programs and materials which are far more powerful and effective than they would be if LSC member institutions worked independently.

In the near future, the LSC EPO working group will remain active by continuing current programs and developing new initiatives. In particular, the EPO group will work with LSC member institutions, the LIGO Lab and other working committees to:

- Coordinate outreach activities within the LSC;
- Work with members of the worldwide network of gravitational-wave observatories to promote outreach in gravitational-wave physics and science in general;
- Provide resources to help the expansion of outreach programs of LSC member institutions. Encourage member institutions to increase their involvement in outreach activities;
- Support LSC member institutions seeking to increase external funding for EPO;
- Actively promote and provide resources for student recruitment;
- Increase diversity within the LSC;
- Expand LIGO multimedia's resources by maintaining existing programs (social networking, blogs, ligo.org web site, ...) and developing new ones (Space Place, EVO webcasts, ...). Monitor and "police" web blogs;
- Continue the successful "Astronomy's New Messengers" exhibit tour;
- Help with the organization of schools, conferences and outreach events at local, national and international level;
- Develop outreach deliverables for the use of collaboration members.

Current and near-future plans in these areas have been described in previous sections.

To accomplish these goals, the EPO group will have to rely on input and resources from members of the LSC. The manpower of the EPO group is currently insufficient for the work required to maintain an outreach program with national reach. Coordination among the member institutions in the field of outreach is also insufficient, as well as funding which relies only on awards to individual member institutions. Since the inception of the LSC EPO group, the lack of an EPO budget at the LSC level has somewhat limited the outreach possibilities of the collaboration. To fix this problem,

the LSC Executive Committee may want to invite individual groups to apply for more outreach-oriented external support for the use of the whole LSC on the model of the "Astronomy's New Messengers" grant. Another possibility could be implementing the "NASA-model" for outreach, which contemplates that a small portion of the budget for every NASA mission must be devoted to EPO projects. Similarly, individual LSC groups with external funding could be requested to pledge a (very) small portion of their external funding, e.g. 0.1%-0.2% of direct costs, to LSC-wide EPO projects. These discretionary funds would support some of the general EPO needs of the LSC, for example they could be used to cover printing costs of an official LSC brochure, support participation of researchers on behalf of the LSC at recruiting fairs, etc. Bookkeeping of the general EPO funds could be done on the model of current scimon shift assignments; an ad hoc committee would request monetary contributions for LSC-wide outreach projects from individual groups within their pledged amount. Better coordination between groups could be achieved by promoting more involvement in outreach activities during MOU annual reviews, providing oversight on EPO programs and identifying strengths and weaknesses in the outreach efforts.

Bibliography

[1] http://einsteinsmessengers.org.

[2] http://nsf.gov/awardsearch/showaward.do?awardnumber=0852870.

[3] http://www.aahom.org/.

[4] http://www.astronomy2009.org.

[5] http://www.blackholehunter.org.

[6] http://www.evo.caltech.edu.

[7] http://www.laserfest.org.

[8] http://www.lightprojectsltd.com.

[9] http://www.ligo.org/students_teachers_public/social.php.

[10] http://www.milde-marketing.de.

[11] http://www.nsf.gov.

[12] http://www.phy.olemiss.edu/ligoexhibit.

[13] http://www.rit.edu/imagine/.

[14] http://www.skolnick.com.

[15] http://www.worldsciencefestival.com.

[16] How the old, the young and everyone in between uses social networks. eMarketer Digital Intelligence, 7 2009.

[17] twitter.com - traffic details from alexa. Alexa Internet, 11 2009.

[18] A. Kazeniac. Social networks: Facebook takes over top spot, twitter climbs. Compete.com, 2 2009.

[19] C. Steinfield N. B. Ellison and C. Lampe. The benefits of facebook 'friends: Social capital and college students' use of online social network sites. *Journal of Computer-Mediated Communication*, 12(4), 2007.