REV.	DATE	DCN #	DRAWING TREE #
A	23 APR 07	E070123-A	

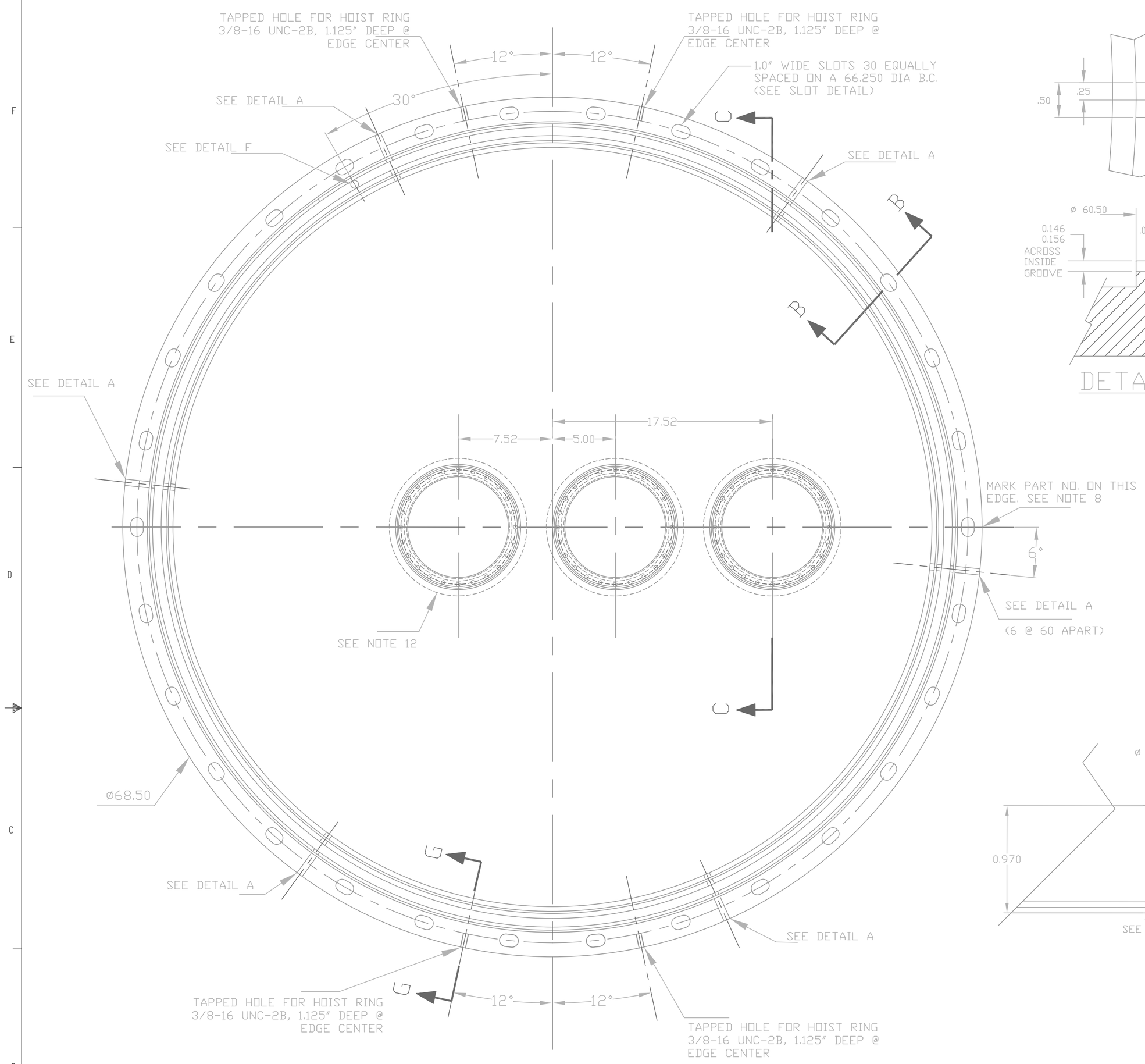

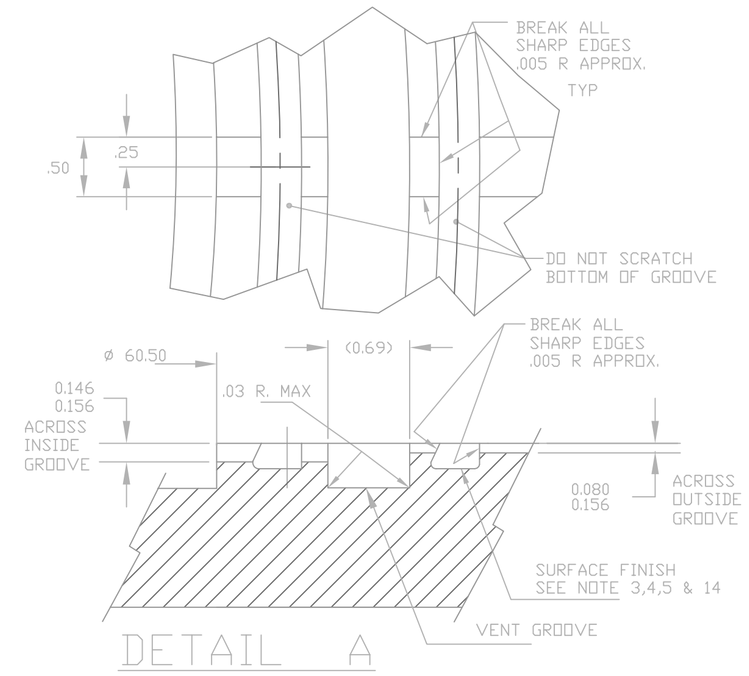

DETAIL A

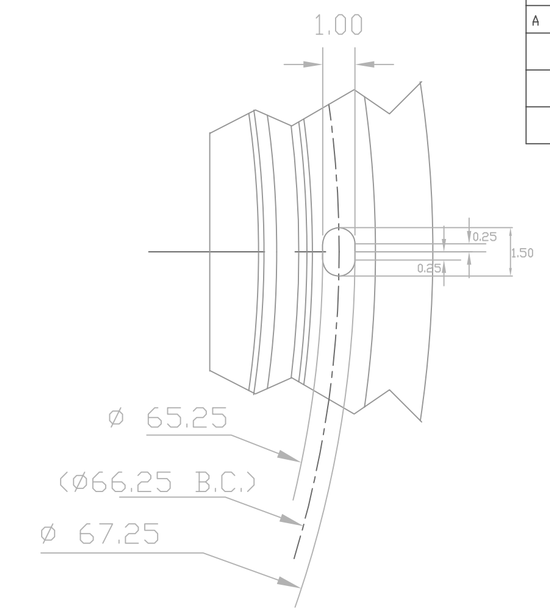

SLOT DETAIL

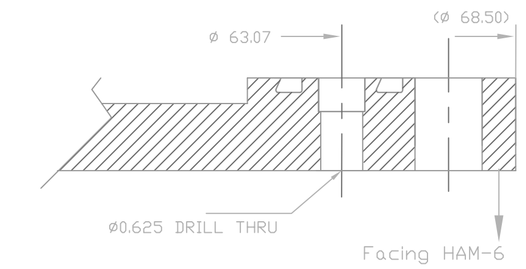

DETAIL F

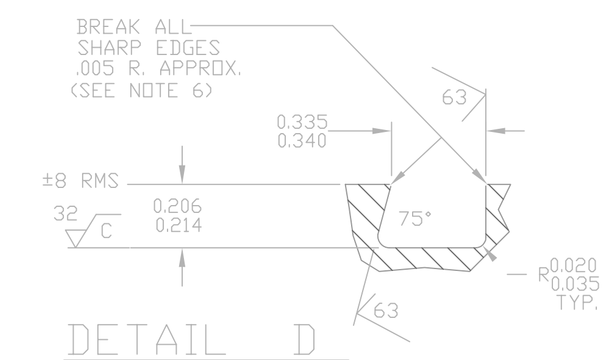

DETAIL D

O-RING GROOVE - 2 PLACES

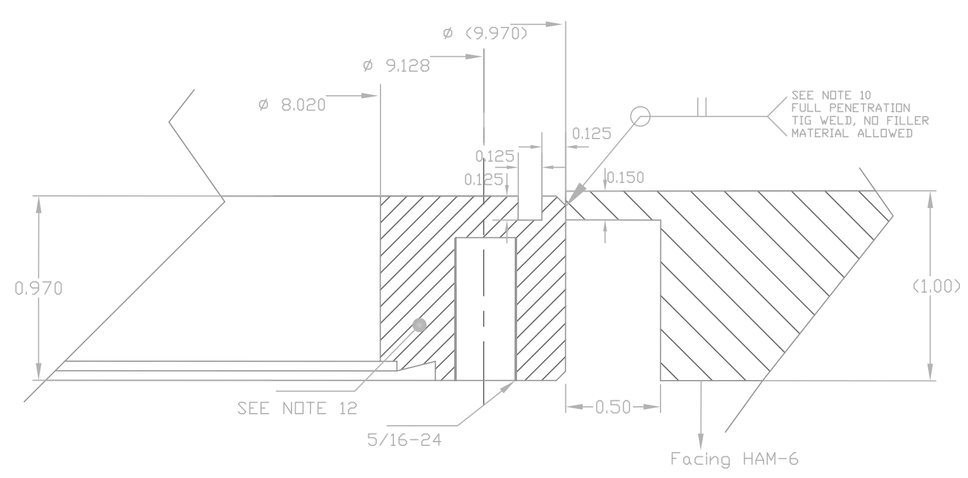

DETAIL E

NOTES:

1: BOTH SURFACES OF PLATE WILL BE USED IN ULTRA HIGH VACUUM SERVICE.
2: ALL MATERIAL TO BE 304L STAINLESS STEEL. MATERIAL CERTIFICATION IS REQUIRED
3: ALL SEALING SURFACES SHALL MEET THE FOLLOWING REQUIREMENTS:
BASIC FINISH REQUIRED: 32 RMS, CONCENTRIC LAY (FINISH TOLERANCE +/- 8 RMS)
THE FOLLOWING PROCESSES ARE NOT ALLOWED: GRINDING, HONING, LAPPING, POLISHING, BUFFING, SANDING, BLASTING, OR ANY OTHER PROCESS THAT DISTURBS THE CONCENTRIC MACHINING LAY, IMBEDS MATERIAL INTO THE SURFACE, OR SMEARS THE SURFACE.
4: O-RING GROOVES AND VENT GROOVE MUST BE MACHINED DURING THE SAME SETUP.
5: NO ABRASIVE STONES, CLOTHS OR GRINDING WHEELS MAY BE USED.
6: NO OIL BASED OR HYDROCARBON BASED CUTTING FLUIDS TO BE USED.
7: NO CARBON STEEL OR OTHER SOURCE OF IRON CONTAMINATION ARE TO COME IN CONTACT WITH THE PLATE DURING MANUFACTURING OR HANDLING.
8: MARK D070107-A ON OUTER EDGE OF PLATE. SCRIBE, ENGRAVE OR MECHANICALLY STAMP (NO DYES OR INKS) PART NUMBER ON NOTED SURFACE OF PART FOLLOWED ON THE NEXT LINE WITH A THREE DIGIT SERIAL NUMBER 001. USE MINIMUM 0.12" HIGH CHARACTERS. A VIBRATORY TOOL MAY BE USED.
9. BREAK ALL SHARP EDGES.
10. VENDOR SHALL PROPOSE ANY ALTERNATIVE WELD PREPS/WELD.
11. WELD THREE NOR-CAL MODIFIED CF FLANGES OR APPROVED EQUIVALENT TO PLATE AT LOCATIONS AS SHOWN. ASSEMBLY THE THREE CONFLATS WITH GASKETS AND BLANK FLANGES.
12. LEAK TEST TO 10^{-9} atm-cc/sec.
13: a) VENDOR SHALL PROPOSE PLATE CLEANING TECHNIQUES. ALL CLEANING AND PACKING SHALL BE APPROVED BY LIGO.
b) VENDOR SHALL PROPOSE BAKE PROCEDURE, IF POSSIBLE.
14: PLATE MUST BE PACKAGED, HANDLED, AND SHIPPED IN SUCH A MANNER AS TO MAINTAIN SPECIFIED SURFACE FINISHES.

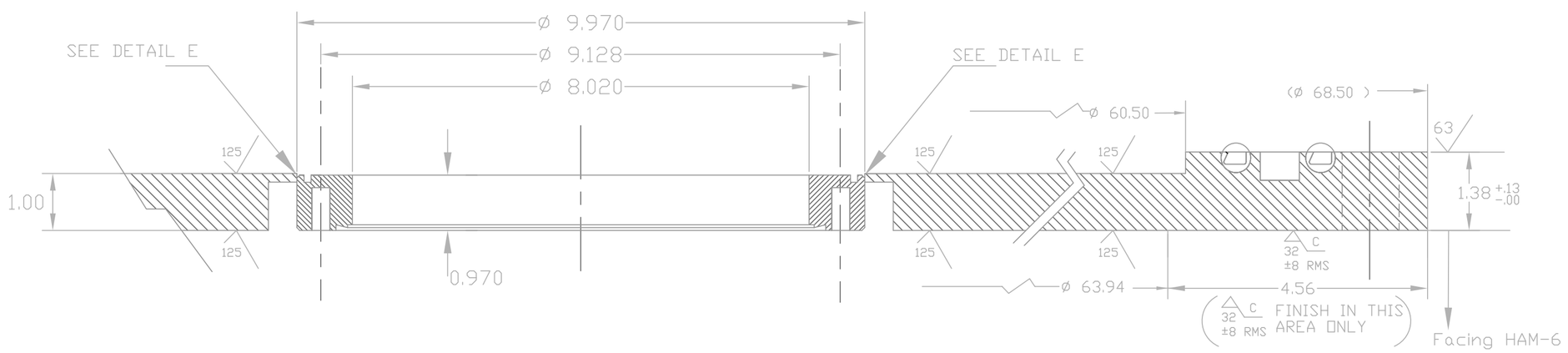

SECTION "C"-"C"

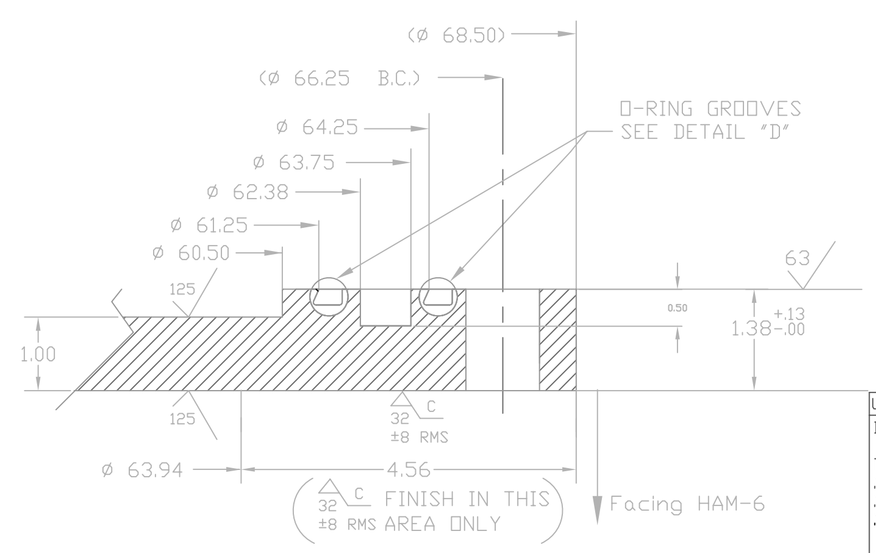

SECTION "B"-"B"

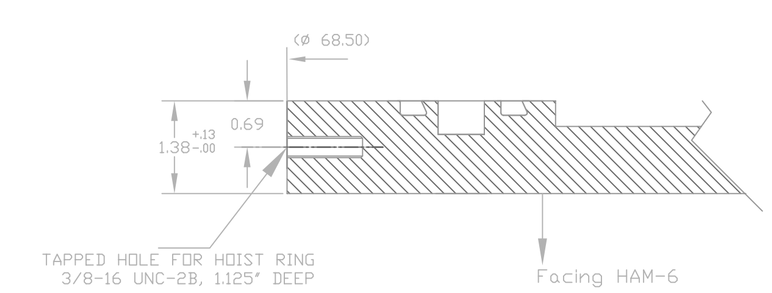

SECTION "G"-"G"

UNLESS OTHERWISE SPECIFIED		DATE	NAME
DIMENSIONS ARE IN INCHES	DRAWN	23 APR 07	V PARAMES
TOLERANCES: .XX = ±.1 .XX = ±.03 .XXX = ±.01	CHECKED	23 APR 07	J WORDEN
ANGULAR = ± 30'			
MATERIAL 304L	COMMENTS:		
FINISH			

LIGO — CALIFORNIA INSTITUTE OF TECHNOLOGY, MASSACHUSETTS INSTITUTE OF TECHNOLOGY

SYSTEM	VACUUM EQUIPMENT
SUB-SYSTEM	
NEXT ASSY	
PART NAME	HAM6 SEPTUM PLATE
SIZE D	DWG. NO. D070107
REV	A
SCALE: DO NOT SCALE DRAWING	SHEET 1 OF 1