INTRALINK NAME: D060377

REV.	DATE	DCN #	DRAWING TREE #
A	18/OCT/06	E060247	.
B	19/DEC/07	E060247-B	.

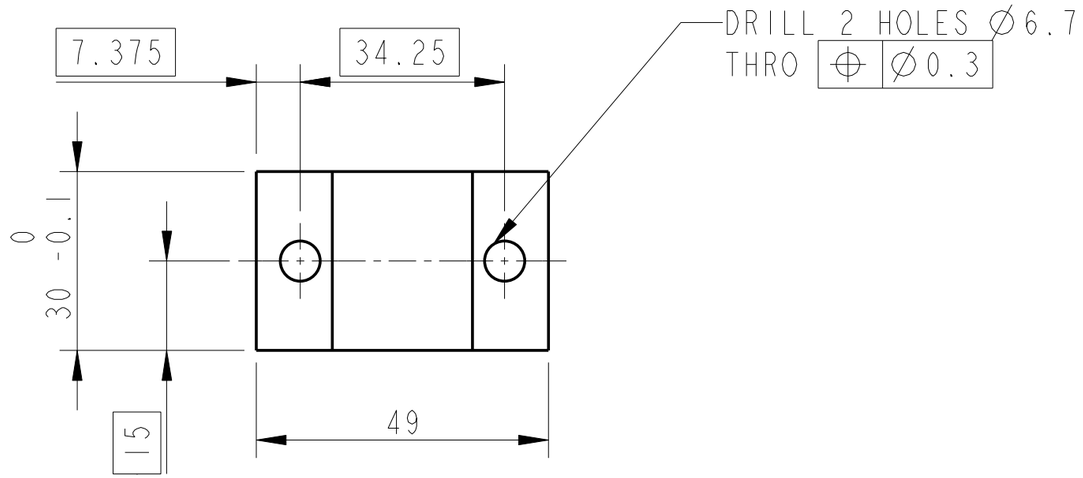

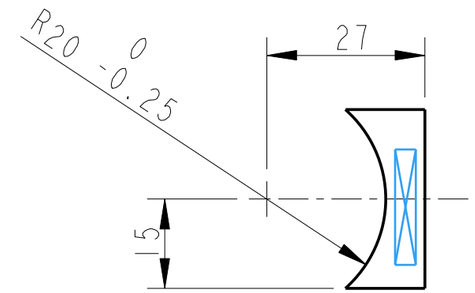

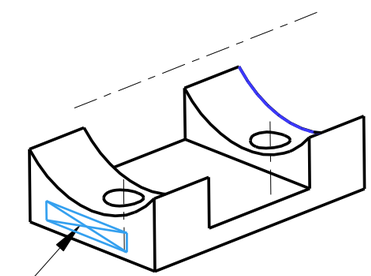

PART NO. (SEE NOTE 4)
TO BE ETCHED OR STAMPED
IN APPROX POSITION SHOWN.

3D VIEW

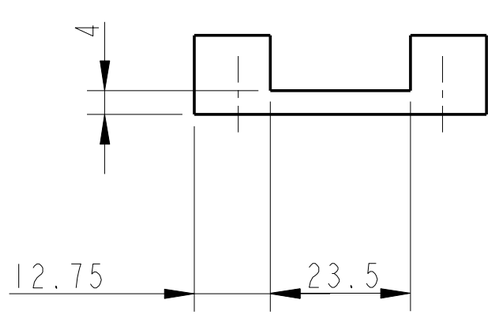

NOTES: (UNLESS OTHERWISE SPECIFIED)

1. REMOVE ALL SHARP EDGES, R.02 MIN.
2. DO NOT SCALE FROM DRAWING.
3. ALL MACHINING FLUIDS SHALL BE WATER SOLUBLE AND FREE OF SULFUR, CHLORINE AND SILICONE, SUCH AS CINCINNATI MILACRON'S CIMTECH 410 (STAINLESS STEEL)
4. SCRIBE, ENGRAVE OR STAMP DRAWING PARTNUMBER ON NOTED SURFACE OF PART AND A THREE DIGIT SERIAL NUMBER. SERIAL NUMBERS START AT 001 FOR THE FIRST PART AND PROCEED CONSECUTIVELY. USE .07" HIGH CHARACTERS. EXAMPLE: D020188- 001. A VIBRATORY TOOL MAY BE USED.

DIMENSIONS ARE IN mm [INCHES]
TOLERANCES:
X.XX ±0.1 mm
ANGULAR ±0.25 °

MATERIAL: AL ALLOY 5083 OR 6061

FINISH: CLEAN, GREASE FREE
√µm [µin] Ra = 1.6

	NAME	DATE
DRAWN	I WILMUT	10/DEC/05
CHECKED	J'OD	15/SEPT/06
APPROVED	IW	15/SEPT/06

LIGO CALIFORNIA INSTITUTE OF TECHNOLOGY
MASSACHUSETTS INSTITUTE OF TECHNOLOGY
IGR, GLASGOW UNIVERSITY GEO 600 GROUP
RUTHERFORD APPLETON LABORATORIES

SYSTEM ADVANCED LIGO

SUB-SYSTEM SUS

NEXT ASSY QUAD N-PTYPE UI MASS

PART NAME BLADE TIP Z POSITION ADJ (BTM HALF PART 2)

SIZE B | DRG. NO. D060377 | REV G.

SCALE 1:1 | PROJECTION: | SHEET 1 OF 1