REV.	DATE	DCN #	DRAWING TREE #
v1	22 Feb. 2010	E1000049	E1000025
v2	28 July 2010	E1000339	E1000025

NOTES CONTINUED:

5. SCRIBE, ENGRAVE, OR MECHANICALLY STAMP (NO INKS OR DYES) DRAWING PART NUMBER, REVISION (AND VARIENT OR "TYPE" IF APPLICABLE ON NOTED SURFACE OF PART FOLLOWED ON THE NEXT LINE WITH A THREE DIGIT SERIAL NUMBER. SERIAL NUMBERS START AT 001 FOR THE FIRST ARTICLE AND PROCEED CONSECUTIVELY. USE MINIMUM 0.12 HIGH CHARACTERS, UNLESS THE SIZE OF THE PART DICTATES SMALLER CHARACTERS. A VIBRATORY TOOL MAY BE USED. EXAMPLE DXXXXXXX-VY, TYPE-XX, S/N XXX.
6. APPROXIMATE WEIGHT = 48.956 LB.
7. MACHINE ALL SURFACES TO REMOVE OXIDES AND MILL FINISH, USE OF ABRASIVE REMOVAL TECHNIQUES IS NOT ALLOWED.
8. ALL PARTS SHALL BE MANUFACTURED IN ACCORDANCE WITH LIGO SPECIFICATION E0900364.
9. ALL THREADED INSERTS TO BE INSTALLED BY LIGO PERSONNEL, AFTER DELIVERY OF FINSIHED PARTS. USE NITRONIC 60 THREADED INSERTS.
10. A TAPPED HOLE PITCH DIAMETER LIMIT OF H11 APPLIES.
11. A TRUE POSITION TOLERANCE OF Ø.010 IS ~ THE SAME AS A CONVENTIONAL TOLERANCE OF ±.005.

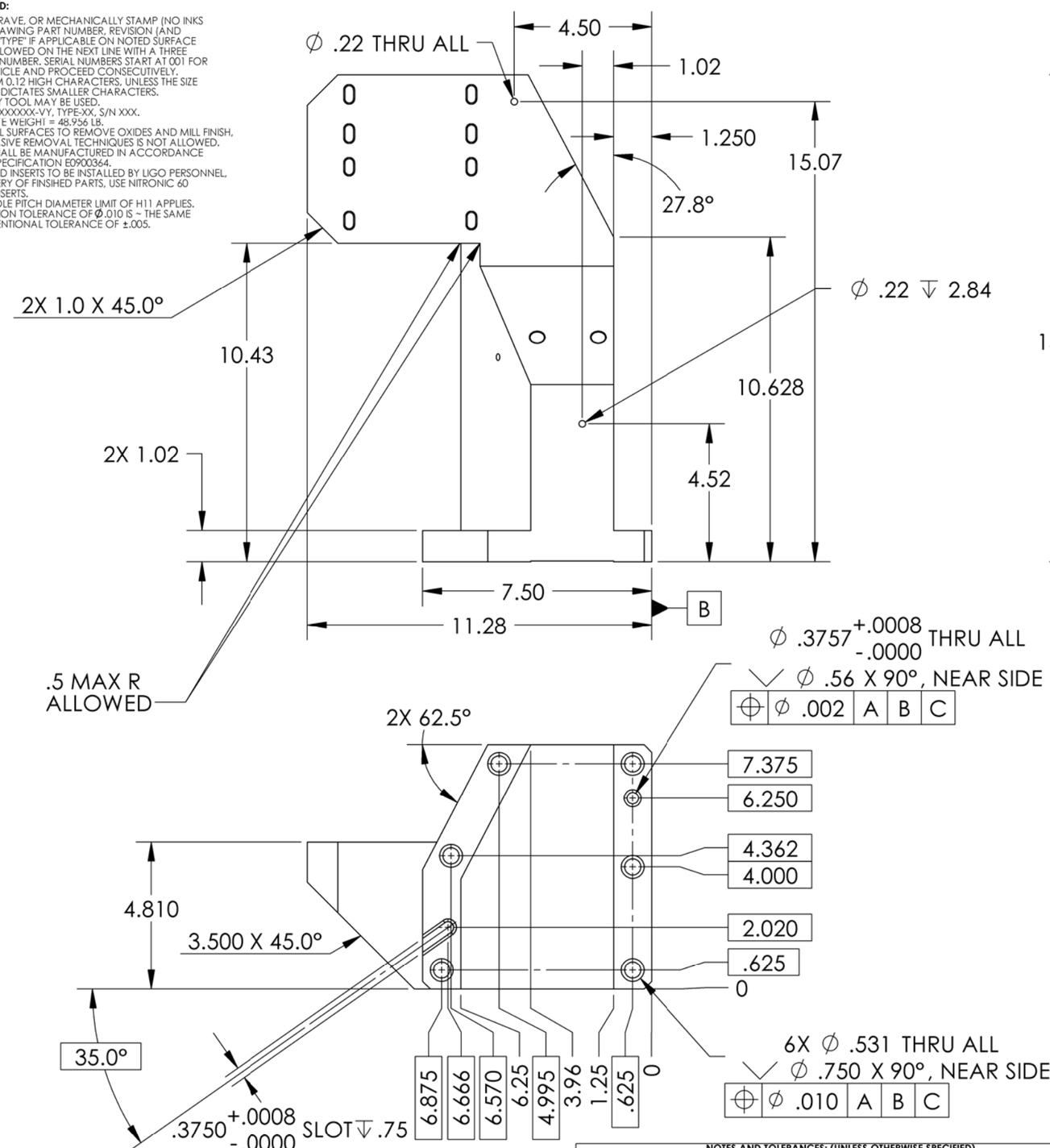

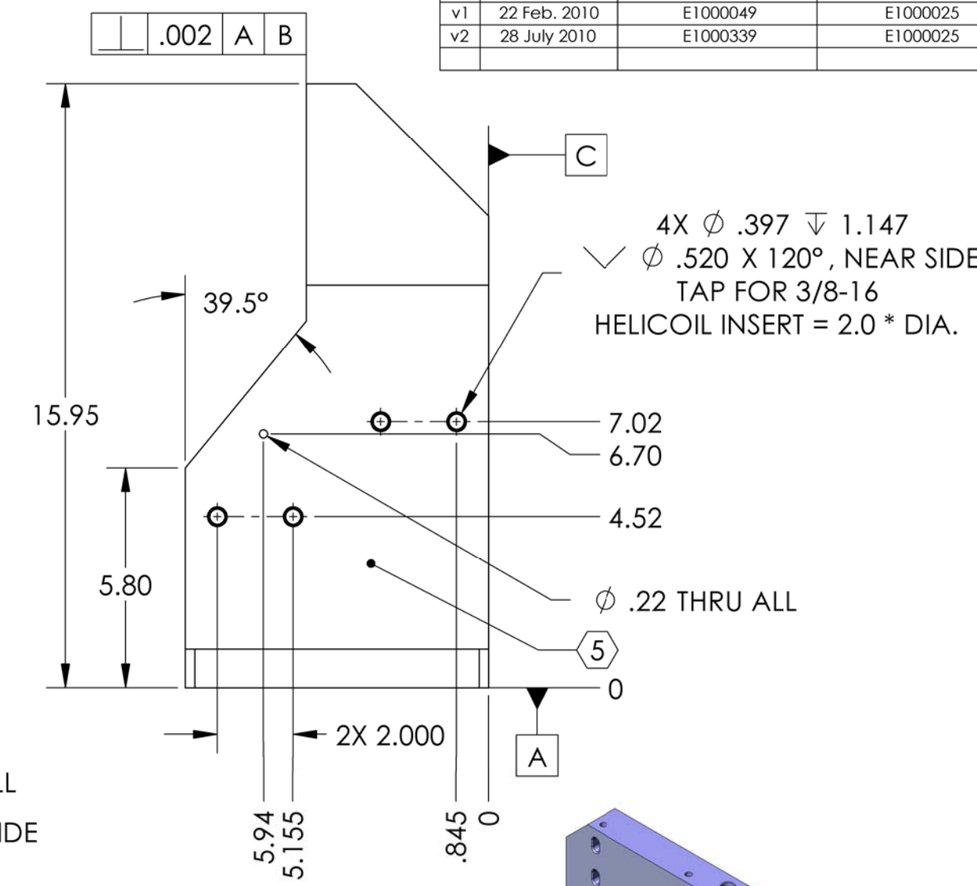

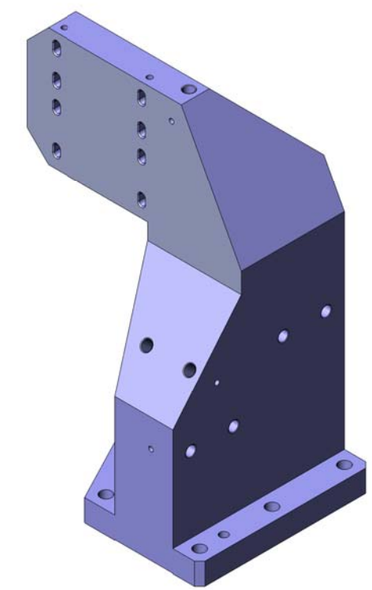

NOTES AND TOLERANCES: (UNLESS OTHERWISE SPECIFIED)

DIMENSIONS ARE IN INCHES

TOLERANCES:
.XX ± .015
.XXX ± .005
ANGULAR ± 0.5°

1. INTERPRET DRAWING PER ASME Y14.5-1994.
2. REMOVE ALL SHARP EDGES, R.02 MIN.
3. DO NOT SCALE FROM DRAWING.
4. ALL MACHINING FLUIDS MUST BE FULLY SYNTHETIC, FULLY WATER SOLUBLE AND FREE OF SULFUR, SILICONE, AND CHLORINE.

MATERIAL: 6061-T6 Al
FINISH: 32 µinch

LIGO — CALIFORNIA INSTITUTE OF TECHNOLOGY, MASSACHUSETTS INSTITUTE OF TECHNOLOGY

SYSTEM: ADVANCED LIGO
SUB-SYSTEM: SEI
NEXT ASSY: D0901182

PART NAME: ACTUATOR POST STAGE 0-1, aLIGO BSC ISI

DESIGNER	S.BARNUM	22 Feb. 2010	SIZE B	DWG. NO. D0901554
DRAFTER	M.HILLARD	22 Feb. 2010		REV. v2
CHECKER	F.MATICHARD	22 Feb. 2010		
APPROVAL	K.MASON	22 Feb. 2010	SCALE: 1:4	PROJECTION:

SHEET 1 OF 2

D0901554 Actuator Post Stage0-1, PART PDM REV: X-022, DRAWING PDM REV: X-009

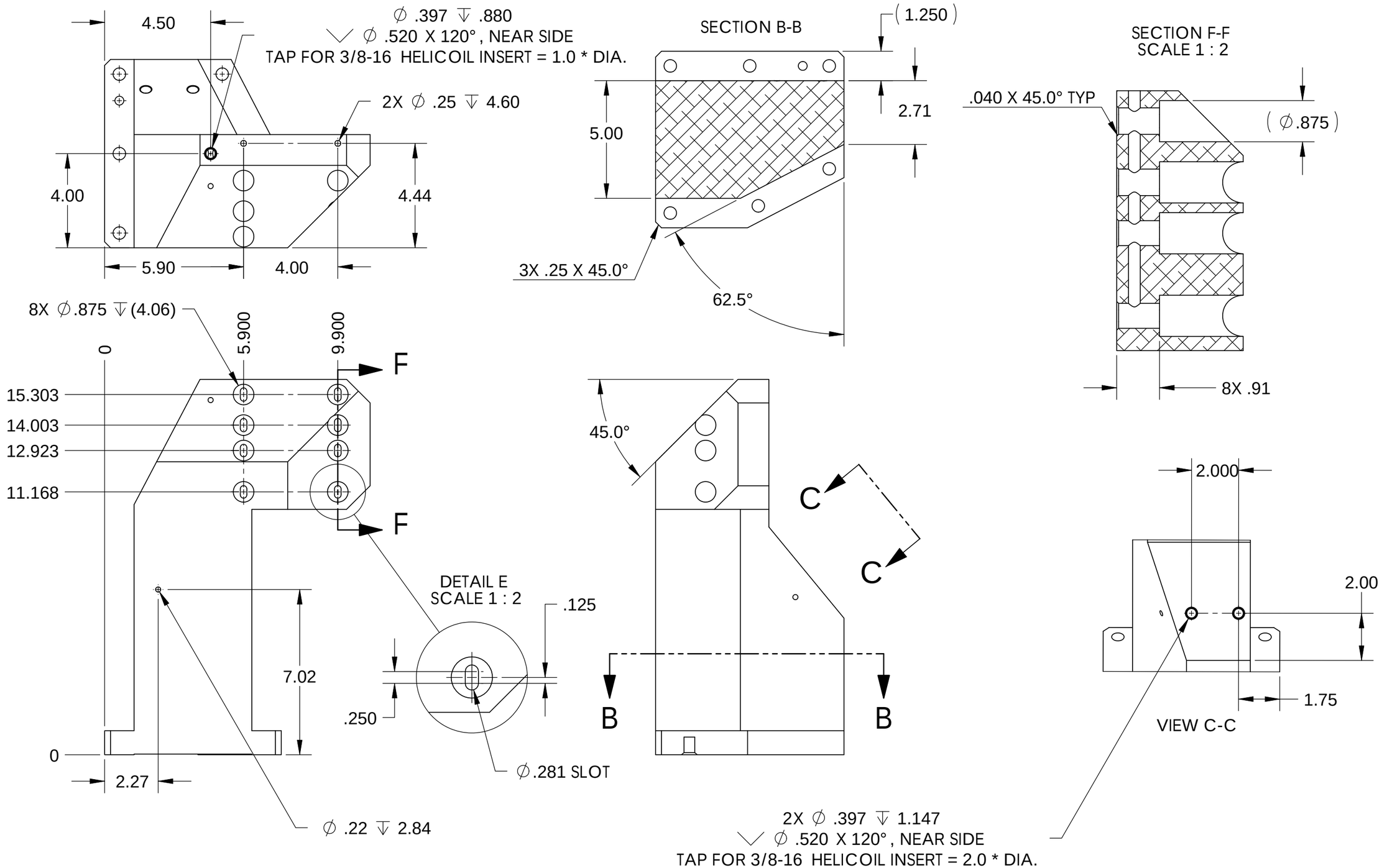

LIGO CALIFORNIA INSTITUTE OF TECHNOLOGY
MASSACHUSETTS INSTITUTE OF TECHNOLOGY

SIZE	DWG. NO.	REV.
B	D0901554	v2

SCALE: 1:4 | PROJECTION: | SHEET 2 OF 2

D0901554 Actuator Post Stage0-1, PART PDM REV: X-022, DRAWING PDM REV: X-009