REV.	DATE	DCN #	DRAWING TREE #
v1	12 Mar. 2010	D0900495	E1000025

NOTES CONTINUED:

5. SCRIBE, ENGRAVE, OR MECHANICALLY STAMP (NO INKS OR DYES) DRAWING PART NUMBER, REVISION (AND VARIENT OR "TYPE" IF APPLICABLE ON NOTED SURFACE OF PART FOLLOWED ON THE NEXT LINE WITH A THREE DIGIT SERIAL NUMBER. SERIAL NUMBERS START AT 001 FOR THE FIRST ARTICLE AND PROCEED CONSECUTIVELY. USE MINIMUM 0.12 HIGH CHARACTERS, UNLESS THE SIZE OF THE PART DICTATES SMALLER CHARACTERS. A VIBRATORY TOOL MAY BE USED. EXAMPLE DXXXXXXX-VY, TYPE-XX, S/N XXX.
6. APPROXIMATE WEIGHT = 31.9 LB.
7. MACHINE ALL SURFACES TO REMOVE OXIDES AND MILL FINISH, USE OF ABRASIVE REMOVAL TECHNIQUES IS NOT ALLOWED.
8. ALL PARTS SHALL BE MANUFACTURED IN ACCORDANCE WITH LIGO SPECIFICATION E0900364.
9. A TAPPED HOLE PITCH DIAMETER LIMIT OF H11 APPLIES TO ALL TAPPED HOLES.
10. A TRUE POSITION TOLERANCE OF Ø.010 IS ~ THE SAME AS A CONVENTIONAL TOLERANCE OF ±.005.

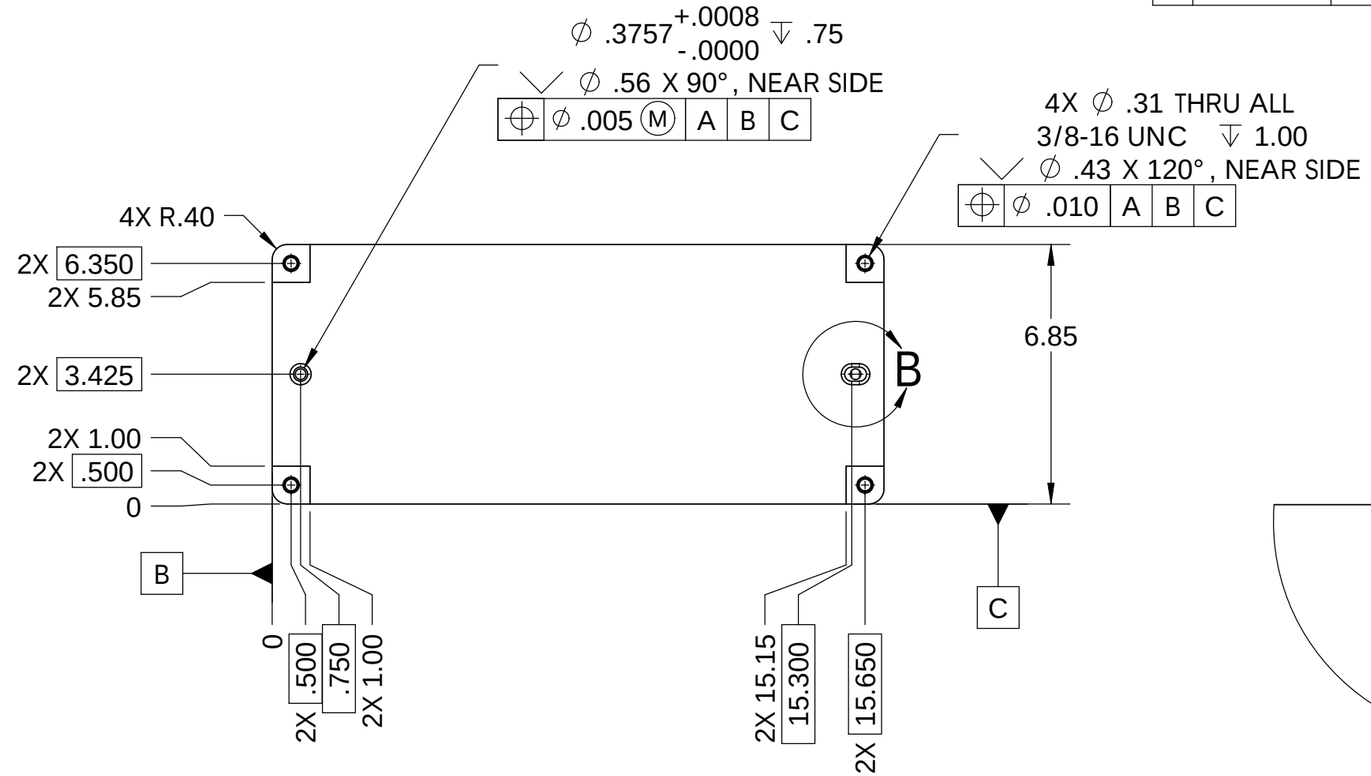

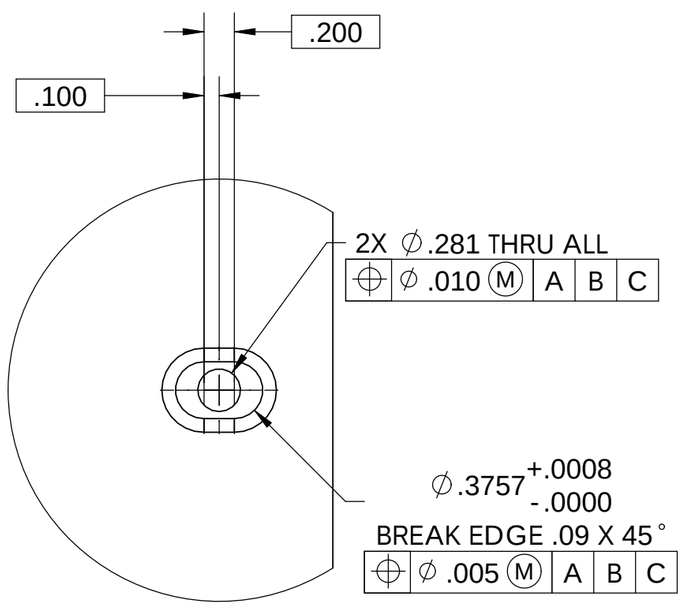

DETAIL B
SCALE 1 : 1

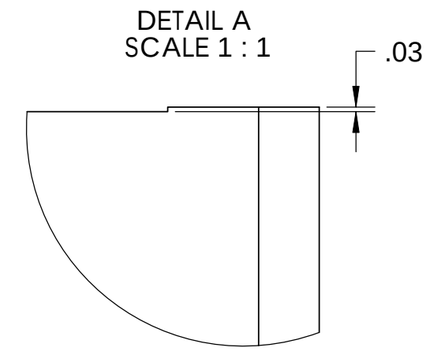

DETAIL A
SCALE 1 : 1

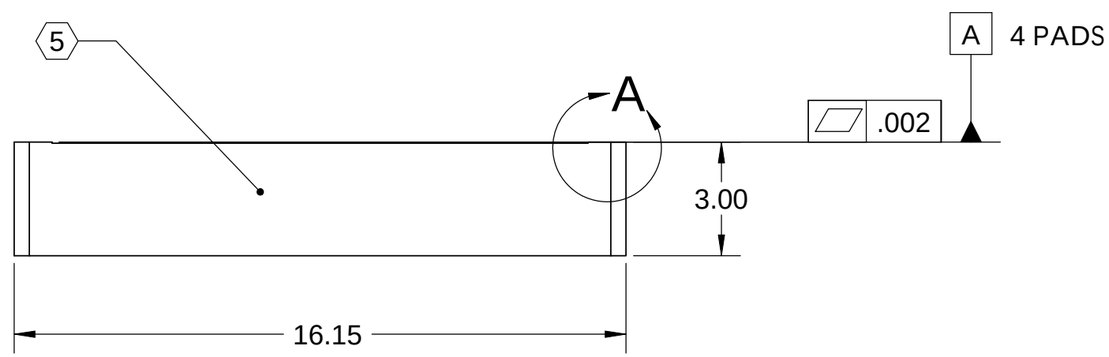

NOTES AND TOLERANCES: (UNLESS OTHERWISE SPECIFIED)		
DIMENSIONS ARE IN INCHES TOLERANCES: .XX ± .015 .XXX ± .005 ANGULAR ± .5°	1. INTERPRET DRAWING PER ASME Y14.5-1994. 2. REMOVE ALL SHARP EDGES, R.02 MIN. 3. DO NOT SCALE FROM DRAWING. 4. ALL MACHINING FLUIDS MUST BE FULLY SYNTHETIC, FULLY WATER SOLUBLE AND FREE OF SULFUR, SILICONE, AND CHLORINE.	
	MATERIAL: 6061-T6 Al	FINISH: 63 µinch

LIGO — CALIFORNIA INSTITUTE OF TECHNOLOGY / MASSACHUSETTS INSTITUTE OF TECHNOLOGY

PART NAME: BALLAST, STAGE 1, aLIGO BSC-ISI

SYSTEM: ADVANCED LIGO | SUB-SYSTEM: SEI | NEXT ASSY: D0901180

DESIGNER	F.MATICHARD	15 Jan. 2010	SIZE: B	DWG. NO.: D0902280
DRAFTER	M.HILLARD	15 Jan. 2010		REV.: v1
CHECKER	A.STEIN	15 Jan. 2010		
APPROVAL	K.MASON	15 Jan. 2010	SCALE: 1:4	PROJECTION: ⌖ ⊟

SHEET 1 OF 1

D0902280 Ballast, Stage 1, BSC-ISI, PART PDM REV: X-012, DRAWING PDM REV: X-010