NOTES CONTINUED:

⑤ SCRIBE, ENGRAVE, OR MECHANICALLY STAMP (NO INKS OR DYES) DRAWING PART NUMBER AND REVISION ON NOTED SURFACE FOLLOWED ON THE NEXT LINE BY A THREE DIGIT SERIAL NUMBER. SERIAL NUMBERS START AT 001 FOR THE FIRST ARTICLE AND PROCEED CONSECUTIVELY. USE .07" HIGH CHARACTERS. EXAMPLE: DXXXXXXX-VY, S/N 001. A VIBRATORY TOOL MAY BE USED.

REV.	DATE	DCN #	DRAWING TREE #
-	-	-	-
-	-	-	-
-	-	-	-

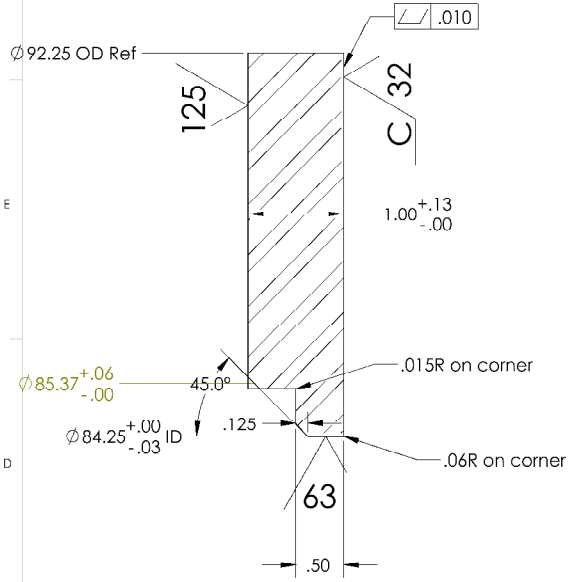

SECTION A-A
SCALE 1 : 1

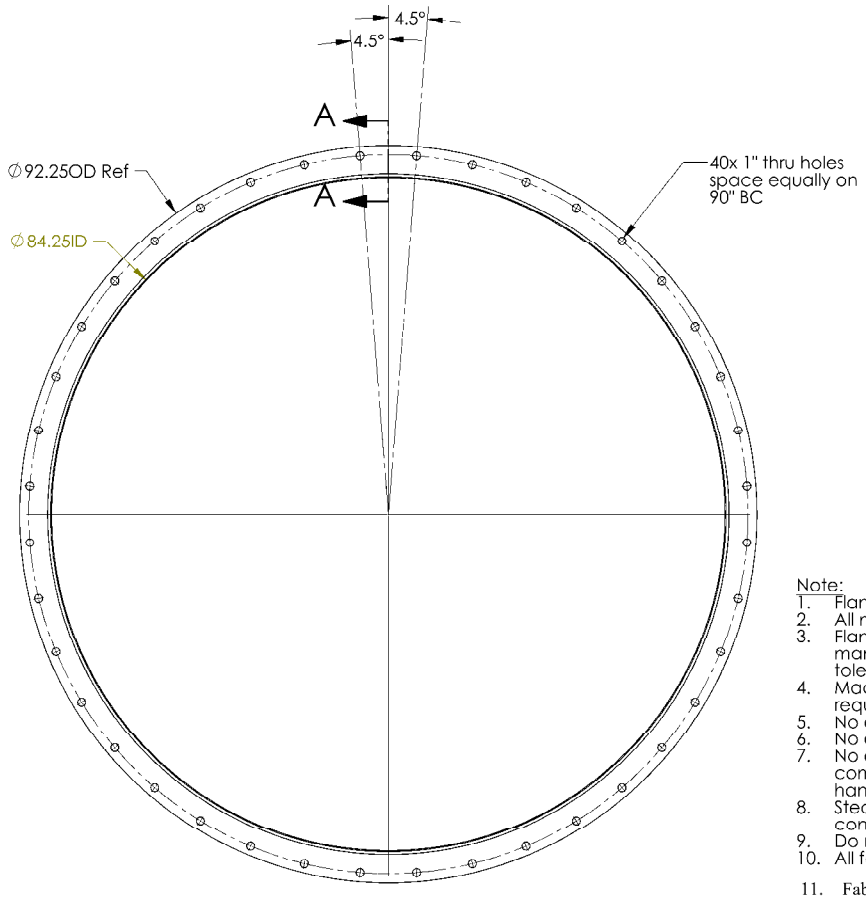

Note:
1. Flanges will be used in ultra high vacuum service
2. All material to be 304l stainless steel.
3. Flanges must be packeaged, handled and shipped in such a manner as to maintain specified surface finishes and flatness tolerances.
4. Machine tool lay to be concentric on all surfaces that require a 32 rms finish.
5. No abrasive stones, cloths or grinding wheels may be used.
6. No oil based or hydrocarbon based cutting fluids to be used
7. No carbon steel or other source of iron contamination are to come in contact with flanges during manufacturing or handling
8. Steam clean and wrap in polyethylene to prevent contamination during shipping
9. Do not machine flange OD
10. All forging manufacturer nos. to be left intact.
11. Fabricate flange from SS Forging # V049M136-1

DIMENSIONS ARE IN

TOLERANCES:
.XX ±
.XXX ±

ANGULAR ± °

NOTES AND TOLERANCES: (UNLESS OTHERWISE SPECIFIED)

1. REMOVE ALL SHARP EDGES, R.02 MIN.
2. DO NOT SCALE FROM DRAWING.
3. DESIGN AND FABRICATE THIS COMPONENT PER LIGO SPECIFICATION E040900411-V1

MATERIAL AISI 304

FINISH inch

LIGO CALIFORNIA INSTITUTE OF TECHNOLOGY MASSACHUSETTS INSTITUTE OF TECHNOLOGY

SYSTEM | **SUB-SYSTEM** | **NEXT ASSY**

PART NAME 84.25 ID FLANGE DETAIL (FLAT FACED)

DESIGNER | **DRAFTER** Jim Warner | **CHECKER** | **APPROVAL**

SIZE C | **DWG. NO.** D0902724-V2 | **REV.**

SCALE: 1:12 | **PROJECTION:** | SHEET 1 OF 1

d06 right flange, PART PDM REV: , DRAWING PDM REV:

.010