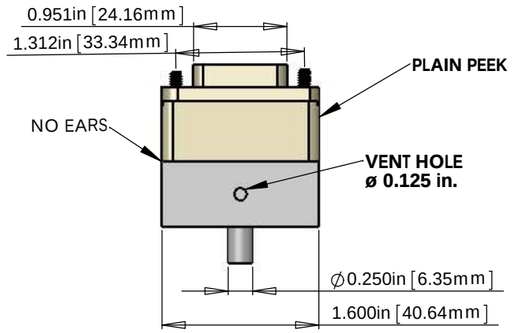

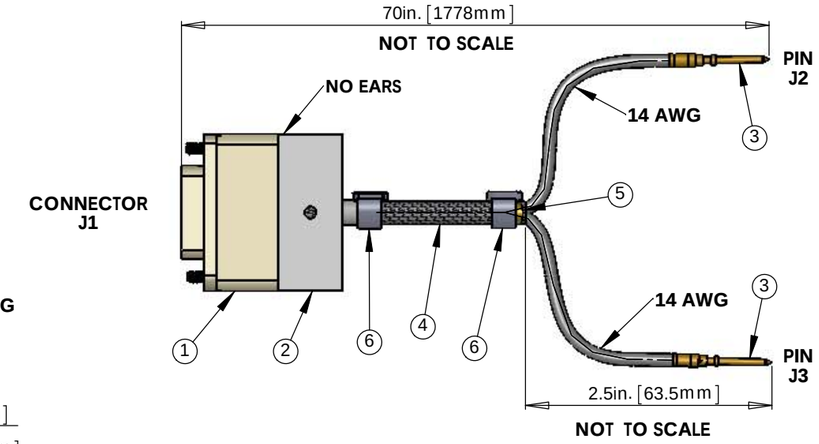

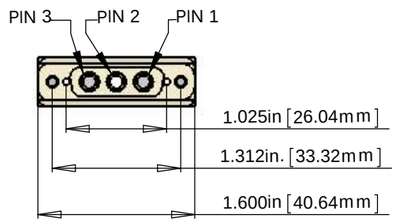

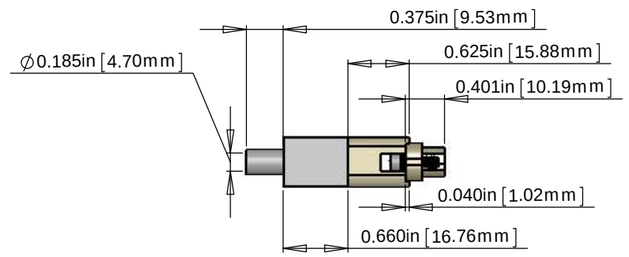

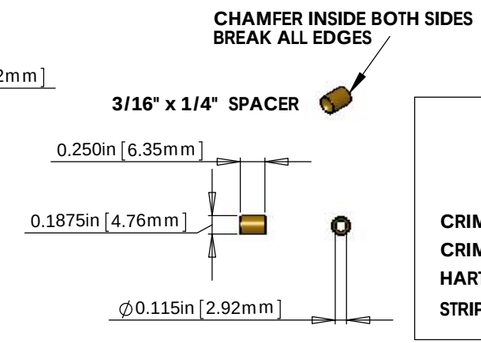

NOT TO SCALE

CRIMP PIN NEWARK P/N 94B8812
CRIMP PIN HARTING # TB09150006126
HARTING CRIMPER # 79K0525
STRIPPING LENGTH FOR WIRE 0.236" (6mm)

BILL OF MATERIALS

ITEM NO.	PART NUMBER	DESCRIPTION	QTY.	LENGTH *
1	CUSTOM DB3 FEMALE	DB3 FEMALE CONNECTOR (J1) FOR UHV (PEEK)	1	
2	CUSTOM BACKSHELL	DB3 CONNECTOR BACK SHELL (NO EARS) FOR UHV (STAINLESS)	1	
3	94B8812	CRIMP PINS (J2, J3) HARTING # 09 15 000 6126 NEWARK # 94B8812	2	
4	C1	2 COND. (2 WIRES + SHIELD) CABLE WITH SILVER PLATED COPPER BRAID (SHIELD) AND PEEK OVERBRAID	1	70in.
5	SPACER	3/16" SPACER 1/4" LENGTH 0.115" i.d.	1	
6	GLENAIR 600-052	GLENAIR 600-052 STANDARD BRAID CLAMP (BAND - IT)	2	

* NOTE: THE OVERALL LENGTH IS MEASURED FROM PIN TIP (3 PIN) TO PIN TIP (CRIMP PINS) OF THE CABLE. THE OTHER MEASUREMENT IS SPACER TO PIN TIPS (CRIMP PINS). USE WHATEVER LENGTH IS NECESSARY FOR THE INTERNAL WIRING OF THE CONNECTORS AND STRIP LENGTH TO ACHIEVE THE CORRECT OVERALL LENGTHS.

V3A-70 CABLE ASSEMBLY CIRCUIT SUMMARY
V-DB3 F/S1-70-2_PIN-94B8812 M/X

CABLE NAME	WIRE NAME	WIRE SIZE	LENGTH *	FROM	TO
V3A-70					
	SHIELD	COPPER BRAID		J1 PIN 1	END OF CABLE
	W1	14 AWG	70in.	J1 PIN 2	J2
	W2	14AWG	70in.	J1 PIN 3	J3

NOTES: (UNLESS OTHERWISE SPECIFIED)

1. **MATERIAL:**
   a. CONNECTOR SHELL - PEEK VICTREX 450GL30.
   b. BACKSHELL - STAINLESS STEEL WITH VENT HOLE.
   c. CONTACTS - BERYLLIUM COPPER ALLOY C17300
      0.000050 MIN. GOLD OVER NICKEL
   d. HARDWARE: CORROSION RESISTANCE STEEL, PASSIVATED
   e. PEEK BRAID - PEEK VICTREX GRADE TDS-450CA30 CARBON LOADED - SUPPLIED BY LIGO
2. CABLE 2 COND. 14 AWG, (STRANDED) WITH 2 LAYERS OF KAPTON TAPE
   OVERALL 40AWG COPPER BRAID 50% COVERAGE - SUPPLIED BY LIGO
   OVERALL PEEK BRAID MIN. 50% COVERAGE
   OVERALL CABLE O.D. WILL BE 0.240 IN.
3. CONNECTORS WILL BE SUPPLIED WITH HARDWARE (LENGTH OF SCREWS AS SHOWN ARE APPROXIMATE SCREWS SHOULD BE THE PROPER LENGTH FOR PROPER MATING)

V-DB3 F/S1-70-2_PIN-94B8812 M/X

STANDARD USE FOR THIS CABLE		
SUBSYSTEM	AIR/VAC	STANDARD USE
SEI	IN-VAC	ISI ACTUATOR

DWG. NO.	DESCRIPTION	DWG. NO.	DESCRIPTION	NEXT ASSY	USED ON
REFERENCE DRAWINGS				APPLICATION	

UNLESS OTHERWISE SPECIFIED
DIMENSIONS ARE IN INCHES
TOLERANCES:
FRACTIONAL ±
ANGULAR: MACH ± BEND ±
TWO PLACE DECIMAL ±
THREE PLACE DECIMAL ±
MATERIAL --
FINISH --
DO NOT SCALE DRAWING

	NAME	DATE
DRAWN	E. BROWN	AUG/26/10
CHECKED	B.ABBOTT	AUG/26/10
ENG APPR.		
MFG APPR.		
Q.A.		

COMMENTS:
SUBSYSTEM
SEI

LIGO
California Institute of Technology
Massachusetts Institute of Technology

CUSTOM CABLE
SPECIFICATION
V3A-70

SIZE C | DWG. NO. D1000918- | REV. V2
SCALE:1:1 | WEIGHT: | SHEET 1 OF 1