REVISIONS				
ZONE	REV	DESCRIPTION	DATE	APPROVED
	A	E010011/INITIAL RELEASE	1-12-01	
	B	E010040/CUT .045 FROM LENGTH,ADD PAD	3-2-01	
	C	E010110/MAKE HOLE LARGER	6-4-01	
	D	E020713/HOLE DIA & PAD TOL	7-9-02	

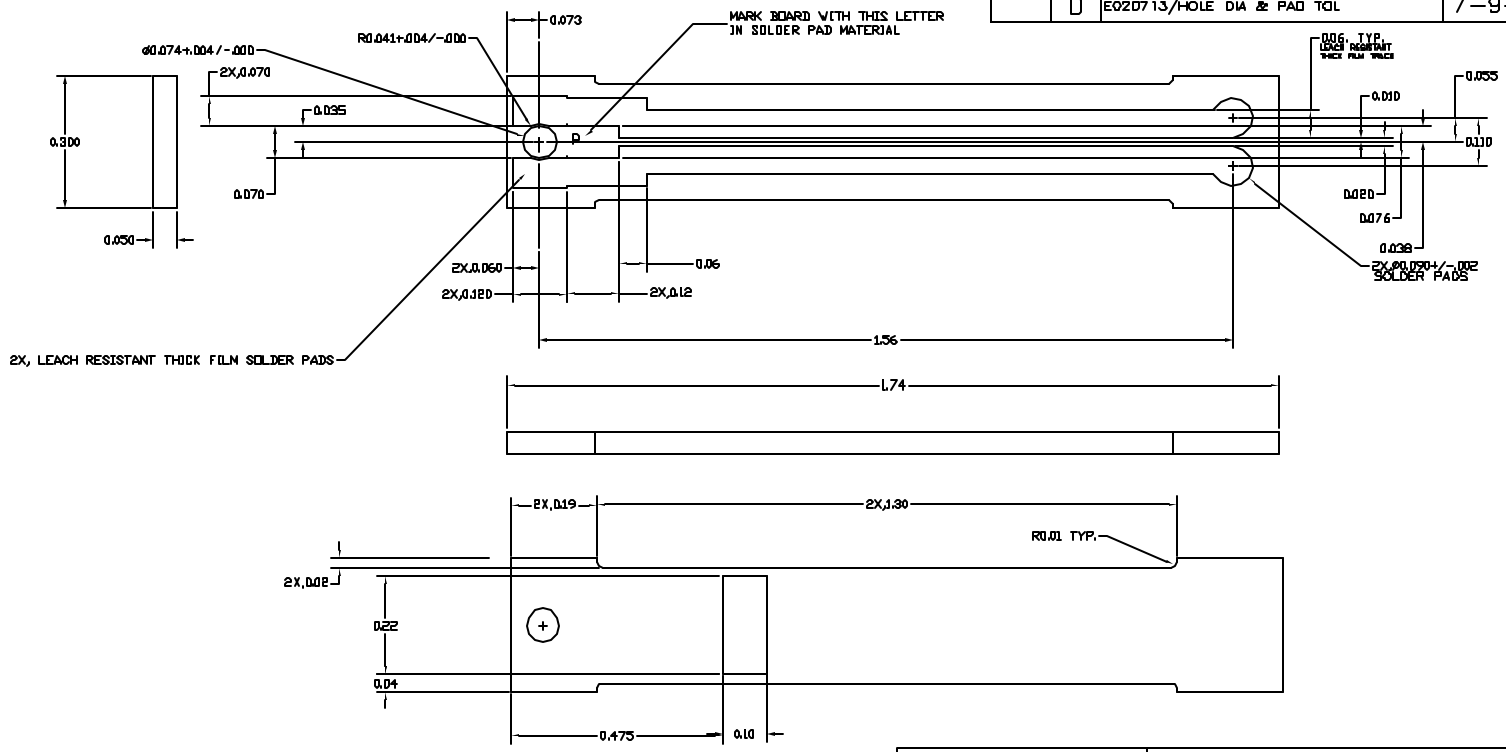

TOLERANCES:
.XX=+/-.01
.XXX=+/-.005

MATERIAL: ALUMINA

LIGO CALIFORNIA INSTITUTE OF TECHNOLOGY
MASSACHUSETTS INSTITUTE OF TECHNOLOGY

ALUMINA CIRCUIT BOARD FOR
SENSOR/ACTUATORS, LONG, PHOTODIODE

SIZE	FSCM NO.	DWG NO.	REV
		D000205	D

SCALE NONE | SHEET