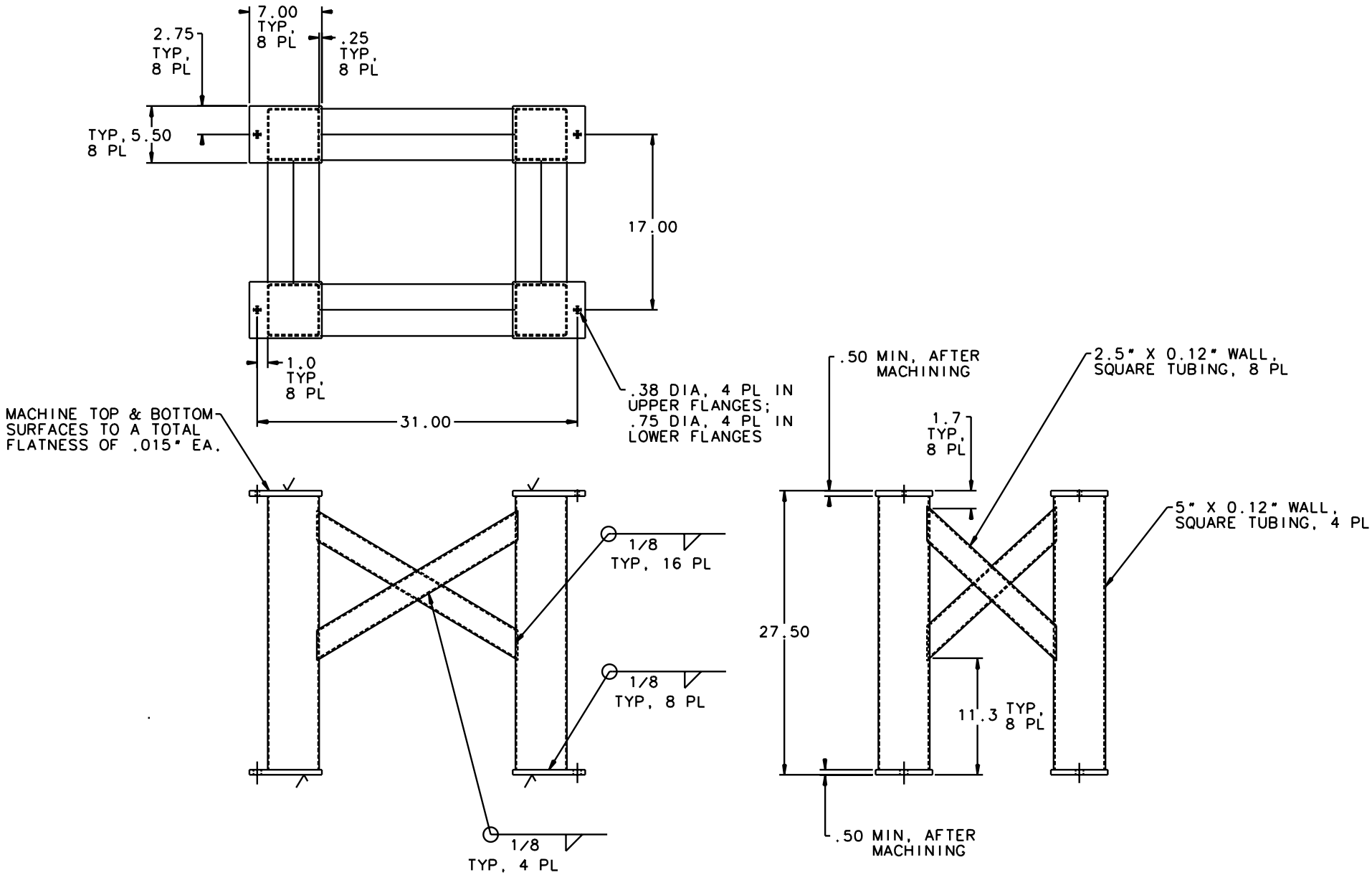

NOTES:
1. ALL DIMENSIONS ARE IN INCHES
2. POSITION CROSS BRACES SUCH THAT EACH END OF EACH LEG IS SUPPORTED BY EITHER TWO OUTBOARD BRACES OR BY TWO INBOARD BRACES.
3. FABRICATION SEQUENCE REQUIRED: PERFORM ALL WELDING, MACHINE TOP AND BOTTOM SURFACES, DRILL 8 HOLES.
4. REMOVE ALL SHARP EDGES.
5. PAINT ALL SURFACES FLAT BLACK.

ALL MATERIAL: STRUCTURAL CARBON STEEL

TOLERANCES: X.XX: +/- 0.03"
X.X: +/- 0.1"

D010107-A-R
STAND FOR 2'X4' TABLE
L. JONES 5/31/01