REV	DATE	DRAWN BY	CHECKED	DCC	DCN/DESCRIPTION
A	8-31-01	J. Romie			E010162/INITIAL RELEASE

NOTES: (UNLESS OTHERWISE SPECIFIED)
1. DIMENSIONS IN INCHES.
2. BREAK ALL SHARP EDGES.
3. ALL MACHINING FLUIDS SHALL BE WATER SOLUABLE AND FREE OF SULFUR, CHLORINE AND SILICONE, SUCH AS CINCINNATI MILACRON'S CIMTECH 410 (STAINLESS STEEL.)
4. ETCH OR STAMP THE DRAWING PART NUMBER ON NOTED SURFACE OF PART AND THEN A THREE DIGIT SERIAL NUMBER. SERIAL NUMBERS START AT 001 FOR THE FIRST PART AND PROCEED CONSEQUETIVELY. USE .07" HIGH CHARACTERS. EXAMPLE: D010164-A 001

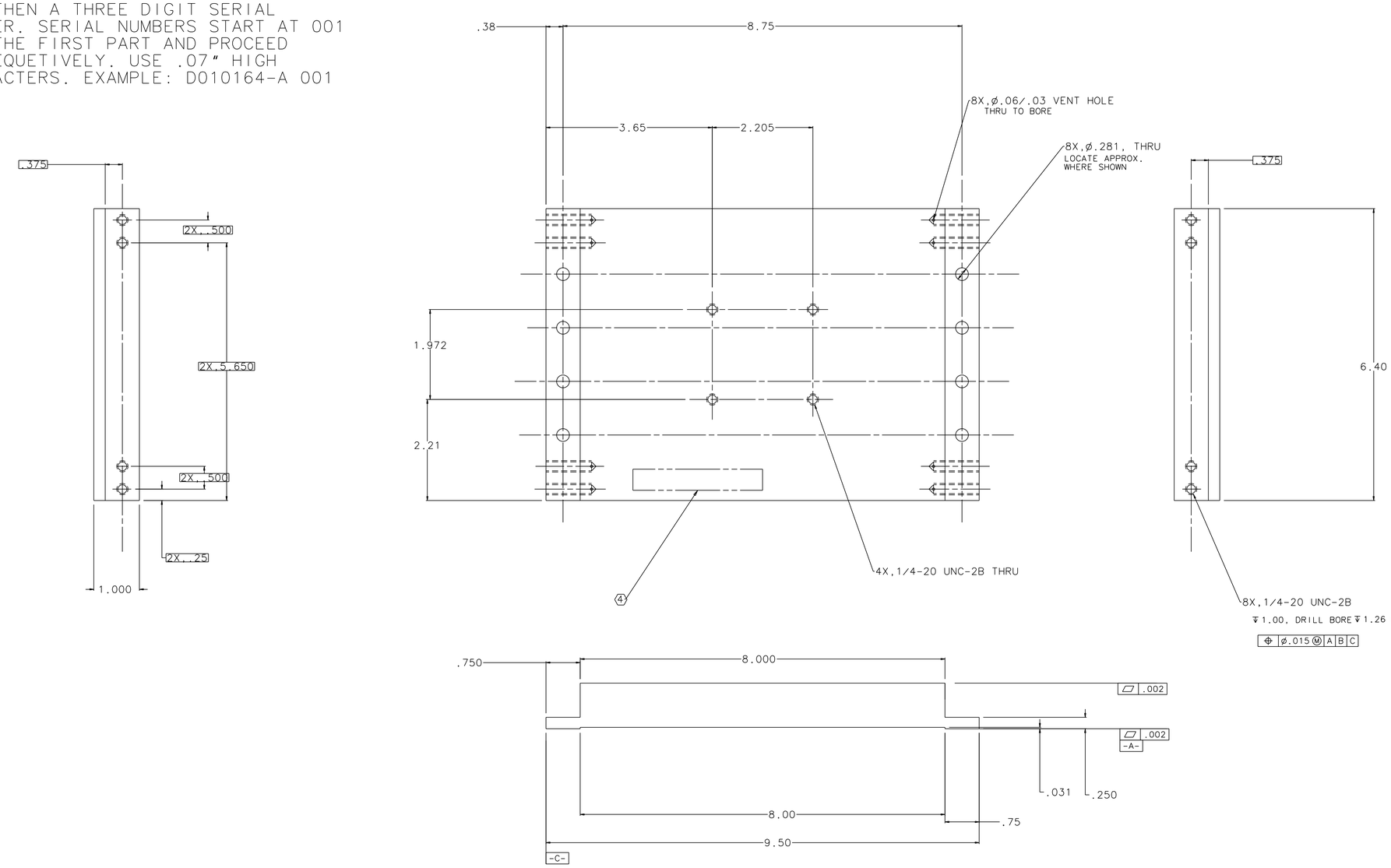

QTY REQD	PART OR IDENTIFYING NO	NOMENCLATURE OR DESCRIPTION	MATERIAL SPCIFICATION	ITEM NO

PARTS LIST

UNLESS OTHERWISE SPECIFIED DIMENSIONS ARE IN INCHES
TOLERANCES ARE:
FRACTIONS DECIMALS ANGLES
0.XX=±0.01
0.XXX=±0.005
ANGLES=±0.5°
DO NOT SCALE DRAWING

APPROVALS	DATE
DRAWN J. ROMIE	8/01
CHECKED	

LIGO CALIFORNIA INSTITUTE OF TECHNOLOGY
MASSACHUSETTS INSTITUTE OF TECHNOLOGY

TITLE 40m TM BASE PLATE

NEXT ASSEMBLY D010163
MATERIAL ALUM 6061-T6
FINISH
FILE LOCATION /home/dcc/docs/D010164.pdf

SIZE E | D010164 | REV A
SCALE 1/1 | SHEET 1 OF 1