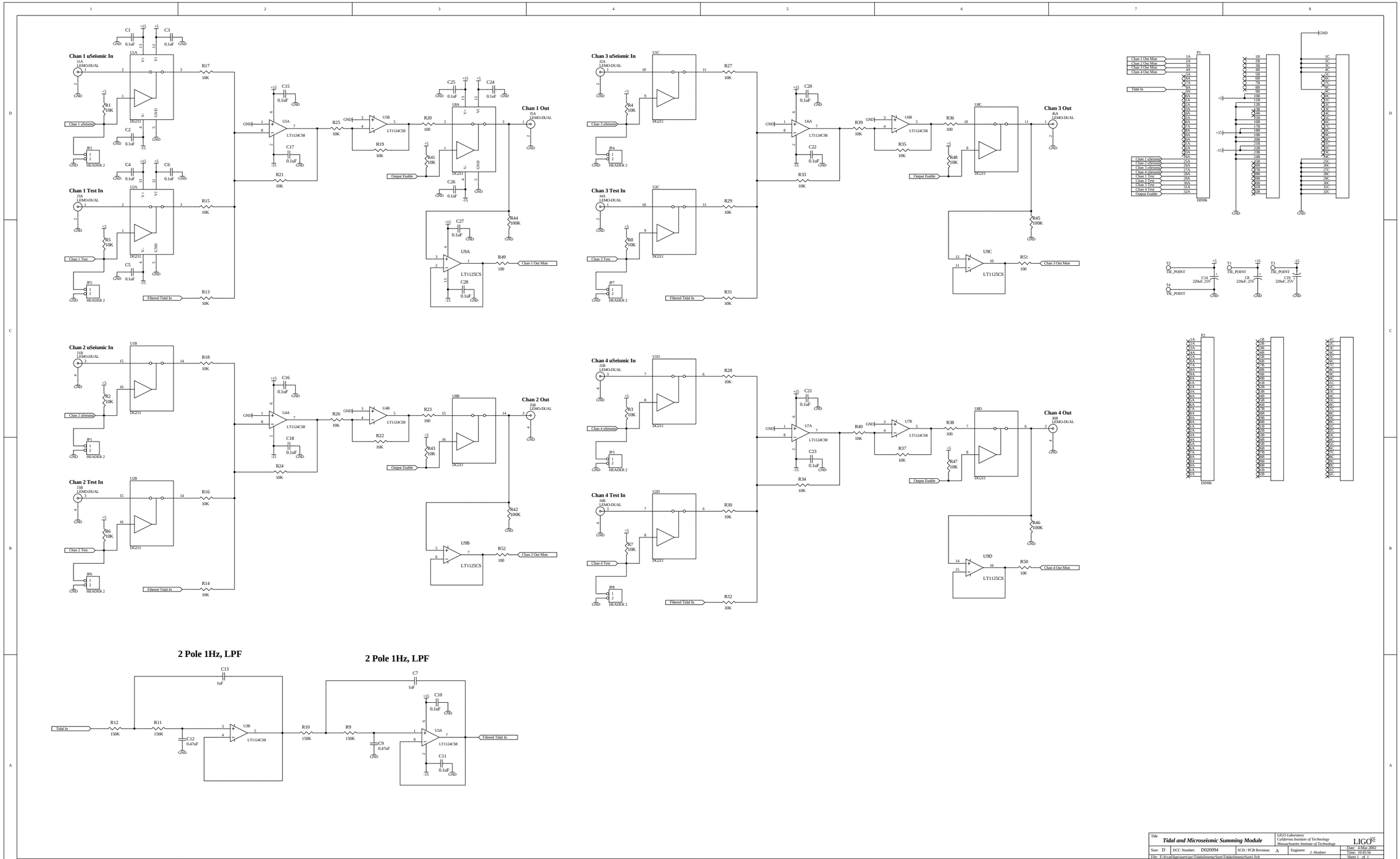

Title: *Tidal and Microseismic Summing Module*		*LIGO Laboratory* *California Institute of Technology* *Massachusetts Institute of Technology*	LIGO
Size: D	DCC Number: D020094	SCH / PCB Revision: A	Engineer: *J. Heefner*
File: E:\f\cad\logi\user\jay\TidalnSeismic\SumTidalnSeismicSum1.Sch			Date: 4-Mar-2002
			Time: 10:45:56
			Sheet 1 of 1