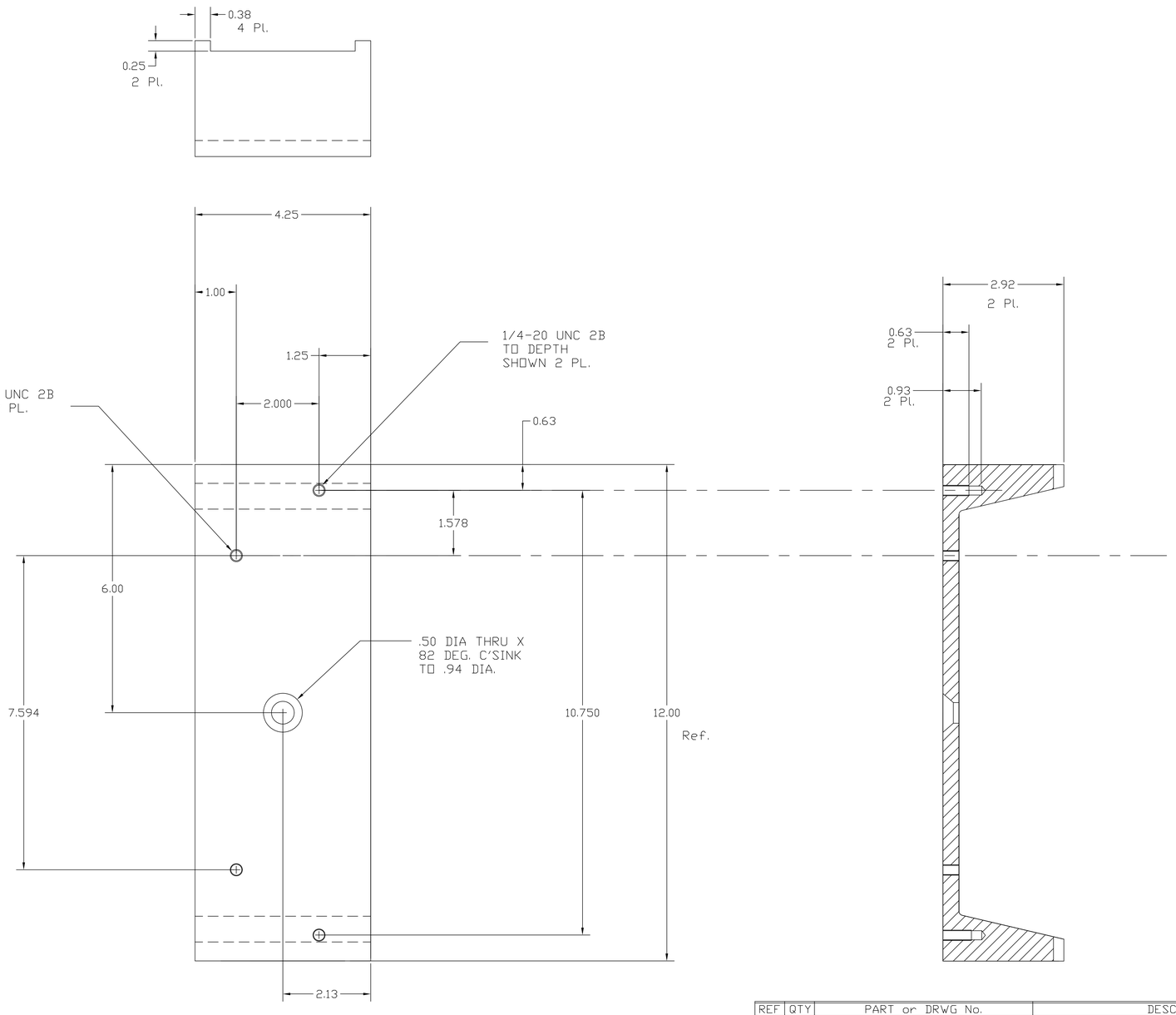

MAKE 1 TOTAL

REF	QTY	PART or DRWG No.	DESCRIPTION	MATERIAL

PARTS and MATERIAL LIST

UNLESS OTHERWISE SPECIFIED
DIMENSIONS ARE IN INCHES

TOLERANCES:
FRACTIONAL ±1/16
ANGULAR ±.25°
~~ANGULARMACH ± BEND ±~~
TWO PLACE DECIMAL ± .01
THREE PLACE DECIMAL ± .005
FINISHED SURFACE RMS 63
BREAK CORNERS IN: .015 OUT: .015
REMOVE ALL BURRS

DWG. NO.	DESCRIPTION
XXX	XXX

REFERENCE DRAWINGS

MATERIAL: 12 X 25 # STL. CHANNEL
HEAT TREAT:
FINISH:
USED ON: XXX
NEXT ASS'Y: XXX

REV	DESCRIPTION	DCN NUMBER		APPR'D	CHECK	DRWN	DATE
A	NEW-RELEASE	LIGO-E020730-00-R				KENM	7-12-02

ISSUE DESCRIPTION

LIGO CALIFORNIA INSTITUTE OF TECHNOLOGY
MASSACHUSETTS INSTITUTE OF TECHNOLOGY

HYDRAULIC
MANIFOLD
MOUNT, MAIN

CAD FILE D020388-A
SIZE D
DWG. NO. D020388-A
SCALE 1 : 1
SHEET 1 OF 1