REV.	DATE	DCN #	DRAWING TREE #
A	1/9/2006	E060001-00	

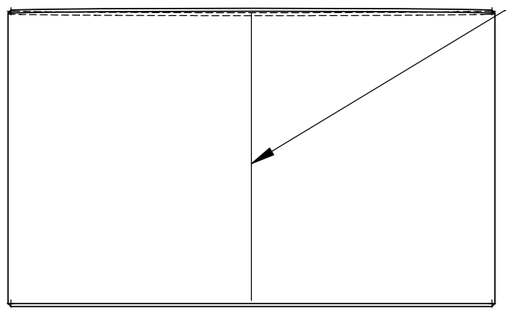

ETCH OR GRIND .25mm +/-.05mm WIDE X 190mm ±5mm LONG x MINIMUM LEGIBLE DEPTH LINE, PARALLEL TO THE CYLINDRICAL AXIS (DEFINED BY DATUM FEATURE -A-), CENTERED BETWEEN, SURFACES #1 AND #2, AND AT A LOCATION OF MAXIMUM PART THICKNESS, ±1°0'

DESCRIPTION	X DIM	SPECIFICATION
SHAPE AND POLISH OD SURFACE 1 & 2 POLISH	200.6 ± 0.2 200.0 ± 0.5	E050191-A E050190-A

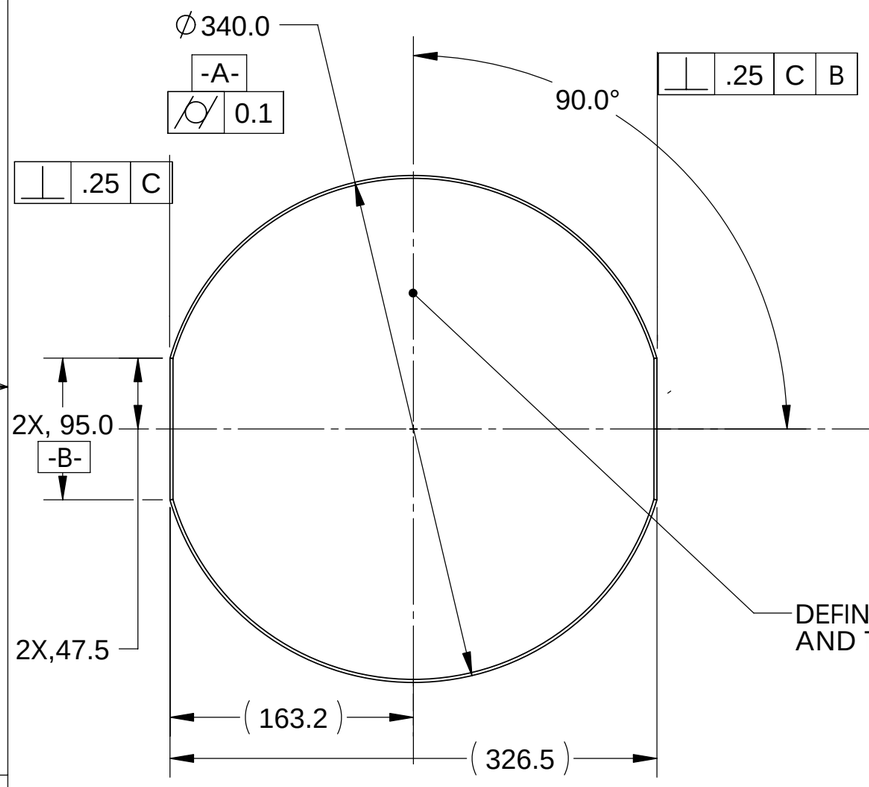

DEFINITION: PLANE BETWEEN THICKEST AND THINNEST POINTS ON OPTIC

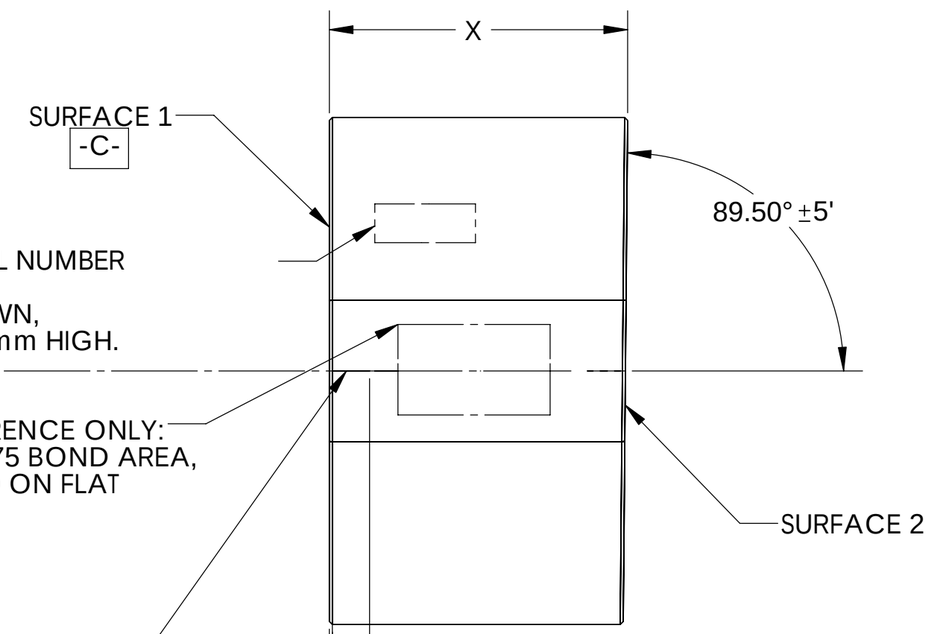

ETCH OR GRIND SERIAL NUMBER PER E050191, APPROX. WHERE SHOWN, LETTERING APPROX. 4mm HIGH.

FOR REFERENCE ONLY: 2X, 100 X 75 BOND AREA, CENTERED ON FLAT

4X, ETCH OR GRIND LINES, 0.25mm ±0.50mm WIDTH x 25.0mm LENGTH x MINIMUM LEGIBLE DEPTH.

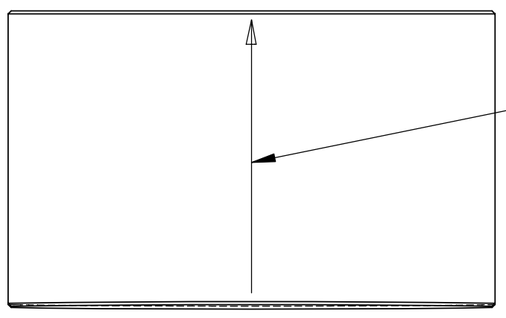

ETCH OR GRIND .25mm ± .05mm WIDE X 190mm ±5mm LONG x MINIMUM LEGIBLE DEPTH LINE, PARALLEL TO THE CYLINDRICAL AXIS (DEFINED BY DATUM FEATURE -A-), CENTERED BETWEEN SURFACES #1 AND #2, AND AT LOCATION OF MINIMUM PART THICKNESS, ±1°0' WITH ARROW POINTING TOWARD SURFACE 1.

PARTS LIST

NOTES: (UNLESS OTHERWISE SPECIFIED)

1. SHAPE AND POLISH PER E050191
2. FINISH SURFACES 1 & 2 PER E050190

DIMENSIONS ARE IN INCHES

TOLERANCES:
.XX ± 0.01
.XXX ± 0.005

ANGULAR ± 0.5 °

MATERIAL: FUSED SILICA

FINISH: SEE NOTES

	NAME	DATE
DRAWN	J. ROMIE	3/05
CHECKED		
APPROVED		

LIGO — CALIFORNIA INSTITUTE OF TECHNOLOGY, MASSACHUSETTS INSTITUTE OF TECHNOLOGY, IGR, GLASGOW UNIVERSITY GEO 600 GROUP

SYSTEM: ADVANCED LIGO

SUB-SYSTEM: COC

NEXT ASSY: QUAD ETM

PART NAME: SILICA TEST MASS

SIZE: B | DWG. NO.: D040431 | REV.: A

SCALE: 1:2 | PROJECTION: | SHEET 1 OF 1