REVISIONS												
LTR	ZONE	DESCRIPTION	DWN	CHK	P-ENG	CONFIG	ME	STRS	MATL	PROJ	QA	RELEASE DATE
A		INITIAL RELEASE										

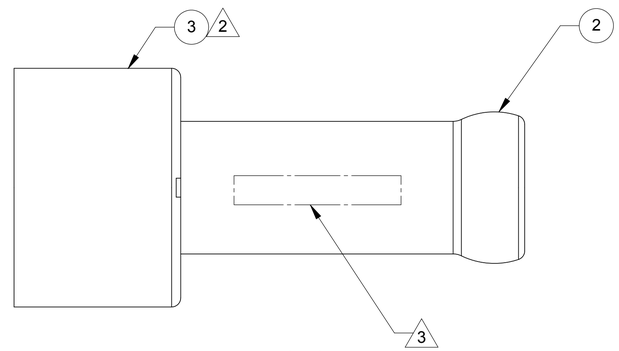

-2 SHOWN

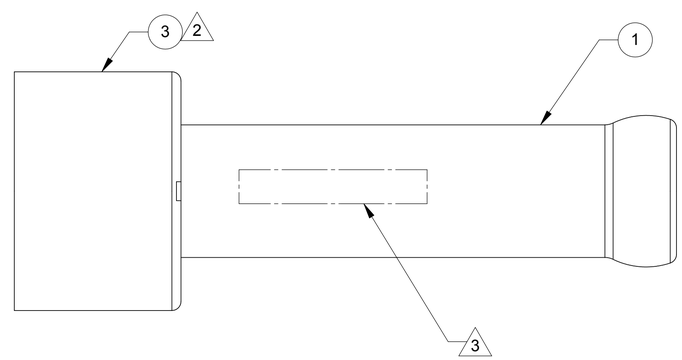

-1 SHOWN

NOTES: UNLESS OTHERWISE SPECIFIED

1. ALL PARTS SHALL BE MANUFACTURED IN ACCORDANCE WITH ASI SPECIFICATION 20008225 (LIGO E048225).

2. TORQUE: 30-60 IN-LBS. DO NOT DENT, MARK, OR OTHERWISE MAR TARGET SURFACE.

3. MARK ASSY NUMBER IN LOCATION APPROXIMATELY AS SHOWN USING 0.13 INCH HIGH CHARACTERS IN ACCORDANCE WITH 20006686, TYPE I, CLASSES 4, 5, OR 6. SERIAL NUMBERS START AT 001 FOR FIRST PART AND PROCEED CONSECUTIVELY.

THIS DOCUMENT MAY CONTAIN ITAR CONTROLLED INFORMATION
AND/OR COMMERCE CONTROLLED INFORMATION
EXPORT RESTRICTIONS MAY APPLY

FILE ATTACHMENTS

20007912-1.x_t 20007912-2.x_t

-2	-1	ITEM NO	REF DES	CAGE NO	PART OR IDENTIFYING NO	NOMENCLATURE OR DESCRIPTION	SPECIFICATION	MATERIAL OR NOTE	ZONE
1	1	3			20007914-1	TARGET			
1		2			20007913-2	POST, STAGE 1-2			
	1	1			20007913-1	POST, STAGE 0-1			

QTY REQD

PARTS LIST

CONTRACT NO	
-2 20007969	1388
-2 20007968	
-1 20007967	1388
-1 20007966	
NEXT ASSEMBLY	PROJECT CODE
APPLICATION	

UNLESS OTHERWISE SPECIFIED
DIMENSIONS ARE IN INCHES
TOLERANCES
DECIMALS .XX ±.03 .XXX ±.010
ANGLES ± 1/2°
MACHINE FINISH ---
DO NOT SCALE DRAWING
INTERPRET DWG PER ASME Y14.5M-1994
MATERIAL
SEE PARTS LIST

RELEASED
THIS DRAWING ARE PRELIMINARY AND NOT UNDER CONFIGURATION CONTROL UNLESS A REO RELEASED
2/24/2005

DWN KEVIN J SPINK 02/22/05
PROJ ENGR
STRS
CHK
MATL
CONFIG
PROJ
ME
QA

ALLIANCE SPACESYSTEMS, INC.
1250 Lincoln Ave., Suite 100
Pasadena, CA 91103

ASSY - DISPLACEMENT SENSOR POST/TARGET LIGO D-047912-A

SIZE	CAGE CODE		REV
D	1KNU9	20007912	A
SCALE 2:1		UNCLASSIFIED	SHEET 1 OF 1

REV 7/04