REVISIONS												
LTR	ZONE	DESCRIPTION	DWN	CHK	ENGR	STRESS	MATL	THRM	ME	PROJ	QA	RELEASE DATE
A		INITIAL RELEASE										

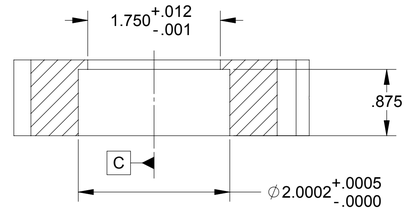

SECTION A-A

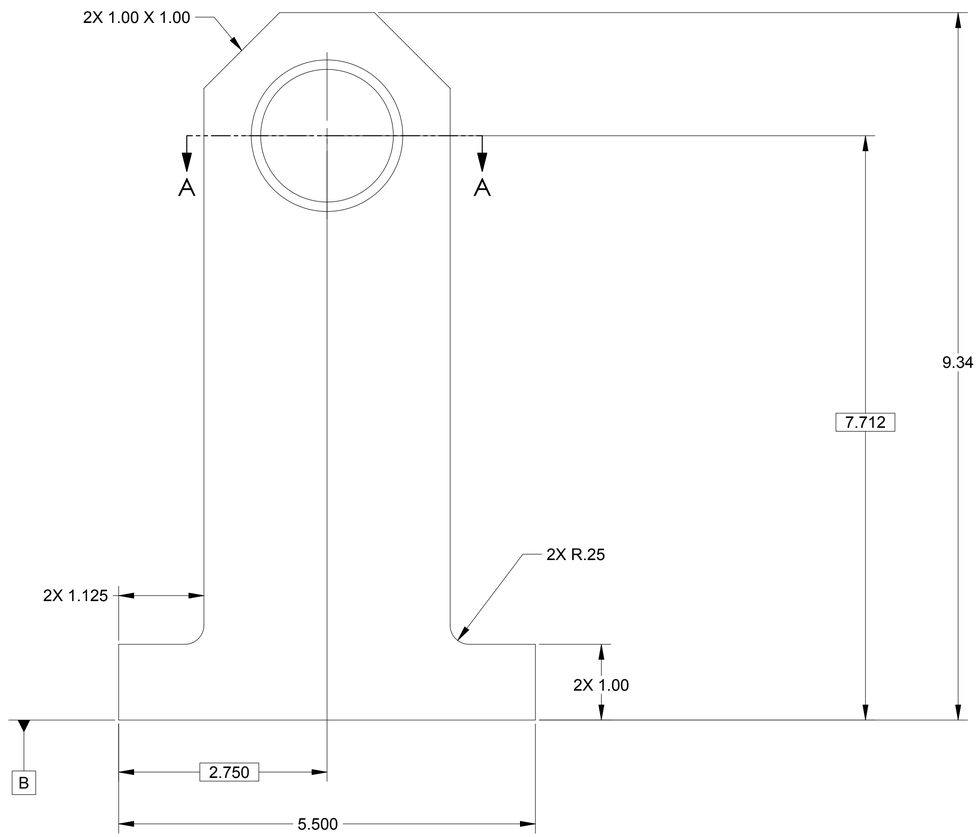

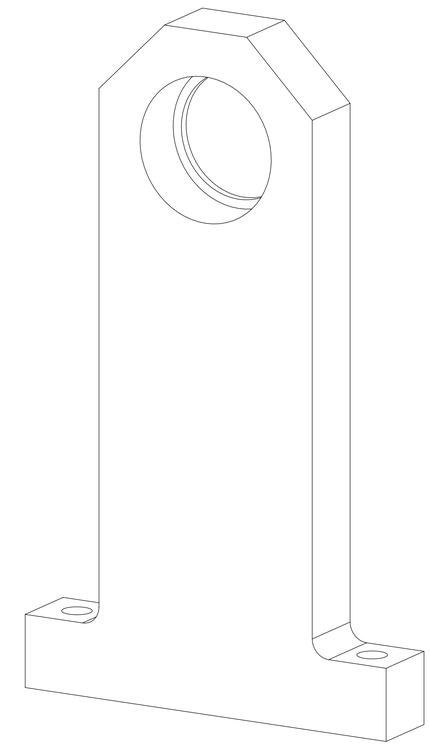

REFERENCE ONLY

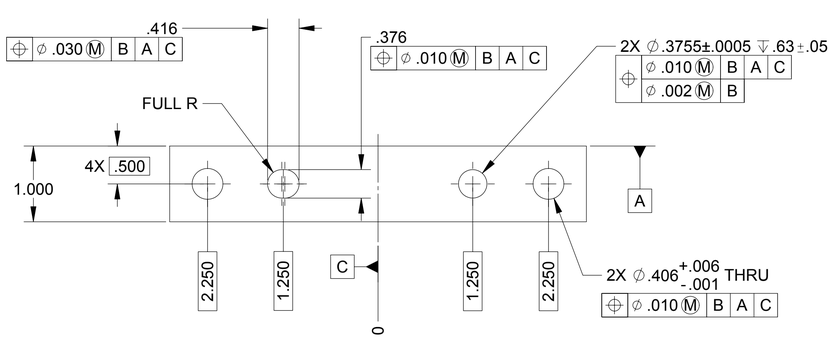

NOTES: UNLESS OTHERWISE SPECIFIED.

1. REMOVE ALL BURRS AND SHARP EDGES .005-.015.
2. MACHINE FILLET RADII .003-.015.

20008062-1

QTY REQD	ITEM NO	REF DES	CAGE NO	PART OR IDENTIFYING NO	NOMENCLATURE OR DESCRIPTION	SPECIFICATION	MATERIAL OR NOTE	ZONE

PARTS LIST

CONTRACT NO 1388

20008050	1388
NEXT ASSEMBLY	PROJECT CODE

APPLICATION

UNLESS OTHERWISE SPECIFIED
DIMENSIONS ARE IN INCHES
TOLERANCES
DECIMALS .XX ±.03 .XXX ±.010
ANGLES ±1/2°
MACHINE FINISH 63
DO NOT SCALE DRAWING
INTERPRET DWG PER ASME Y14.5M-1994

MATERIAL
AL 6061-T651
AMS QQ-A-250/11

RELEASED 8/31/2004
THIS DRAWING IS PRELIMINARY AND NOT UNDER CONFIGURATION CONTROL UNLESS A REL RELEASED DATE IS PRESENT

DWN J. LARAMEE 07/22/04
PROJ ENGR
STRS
CHK
MATL
CONFIG
PROJ
ME
QA

ALLIANCE SPACESYSTEMS, INC.
1250 Lincoln Ave., Suite 100
Pasadena, CA 91103

PLATE, SIDE - CENTER LINK SPRING TEST FIXTURE LIGO-D048062-A

SIZE	CAGE CODE		REV
D	1KNU9	20008062	A

SCALE 1:1 UNCLASSIFIED SHEET 1 OF 1

FILE ATTACHMENTS
20008062.x_t

THIS DOCUMENT MAY CONTAIN ITAR CONTROLLED INFORMATION AND/OR COMMERCE CONTROLLED INFORMATION EXPORT RESTRICTIONS MAY APPLY

REV 6/04