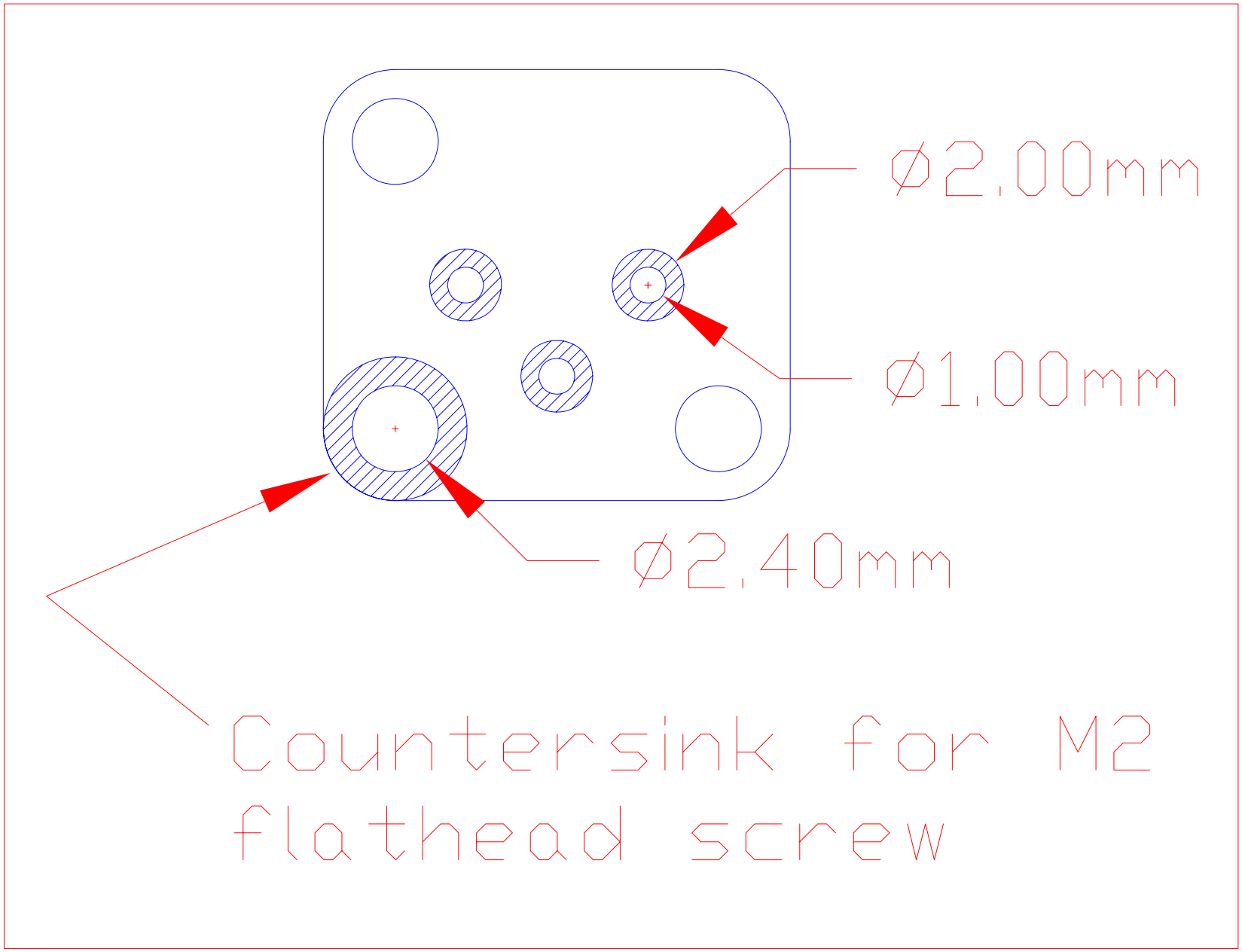
Ø2.00mm
Ø1.00mm
Ø2.40mm
Countersink for M2
flathead screw

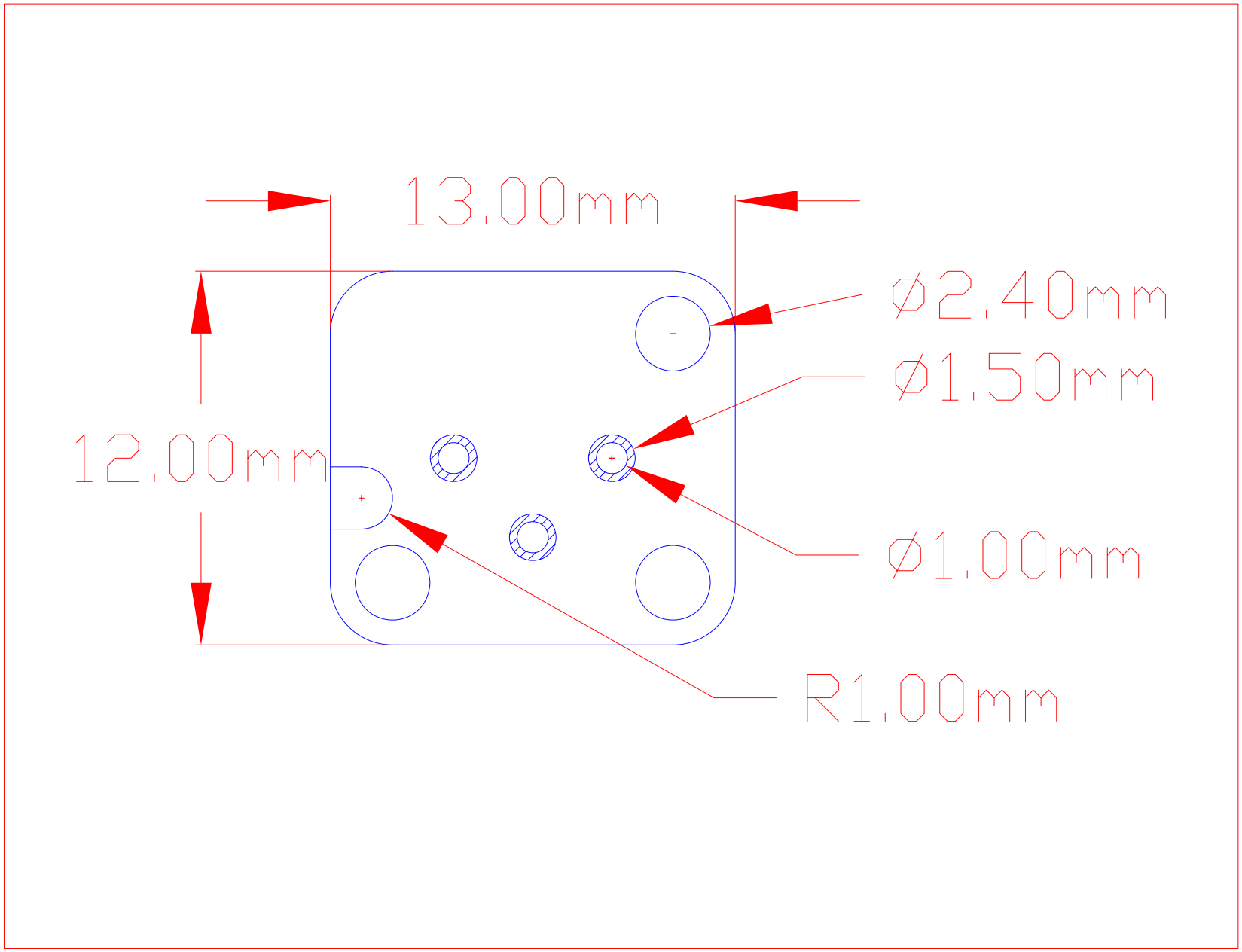
13.00mm
12.00mm
Ø2.40mm
Ø1.50mm
Ø1.00mm
R1.00mm

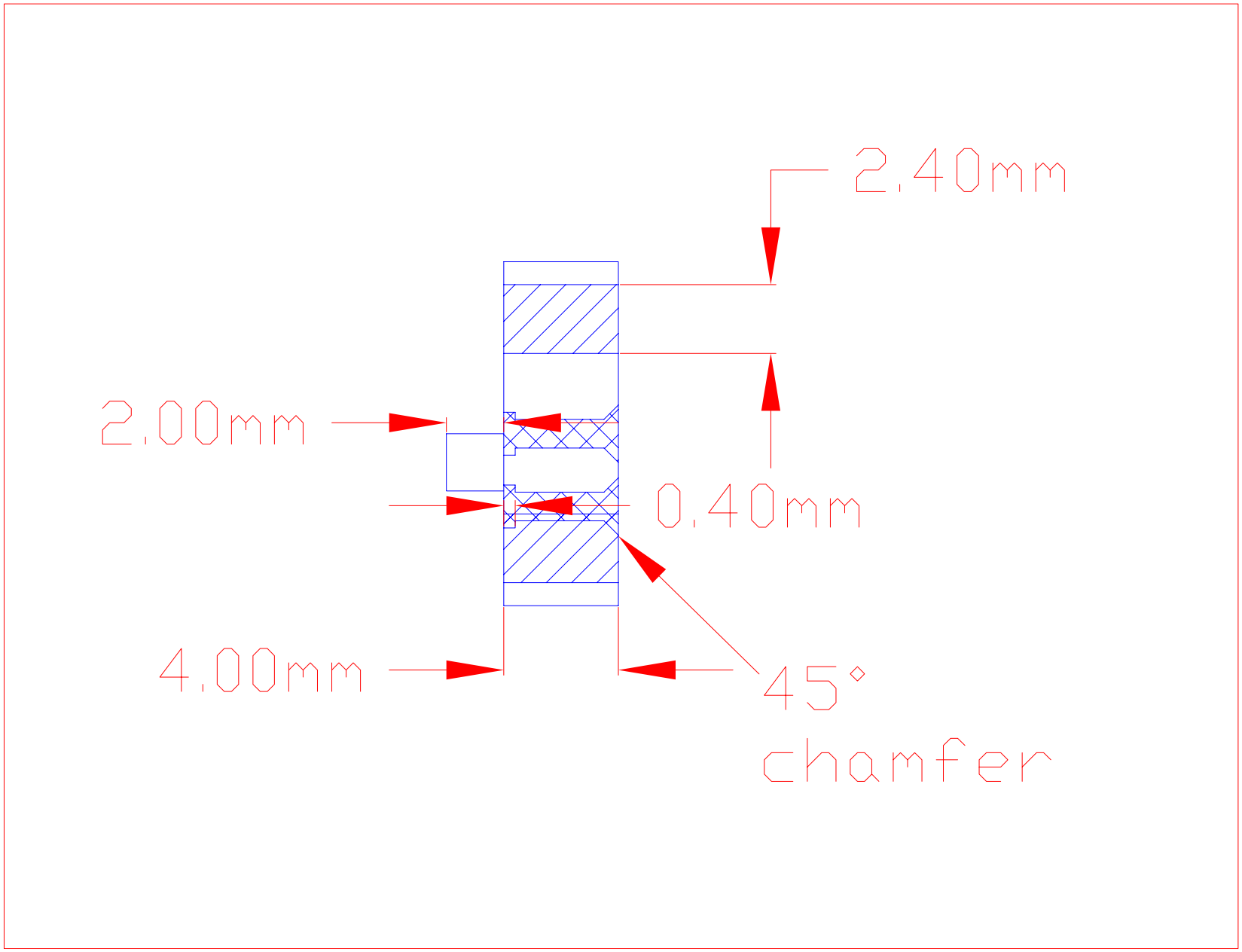
2.40mm
2.00mm
0.40mm
4.00mm
45°
chamfer

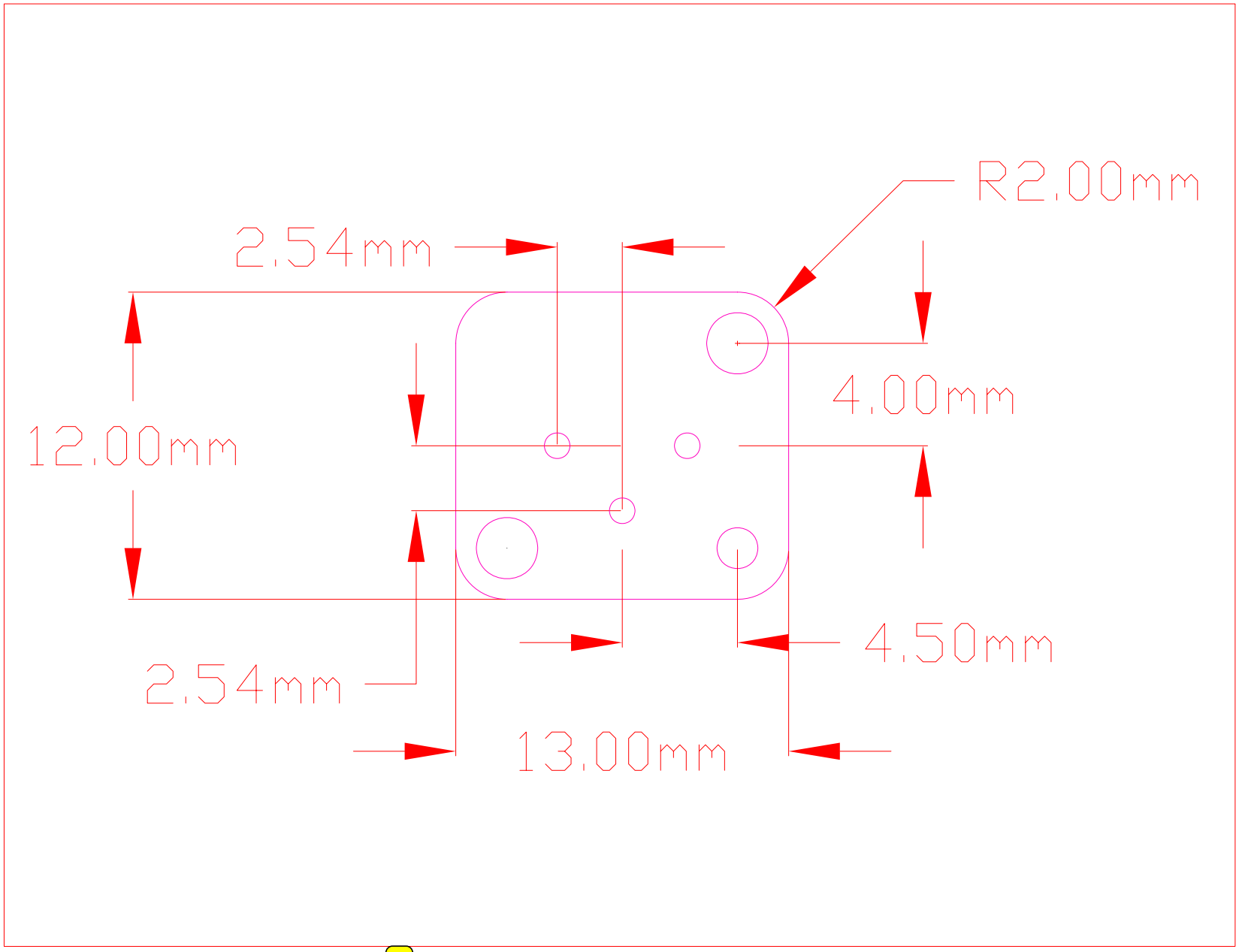
R2.00mm
2.54mm
4.00mm
12.00mm
4.50mm
2.54mm
13.00mm

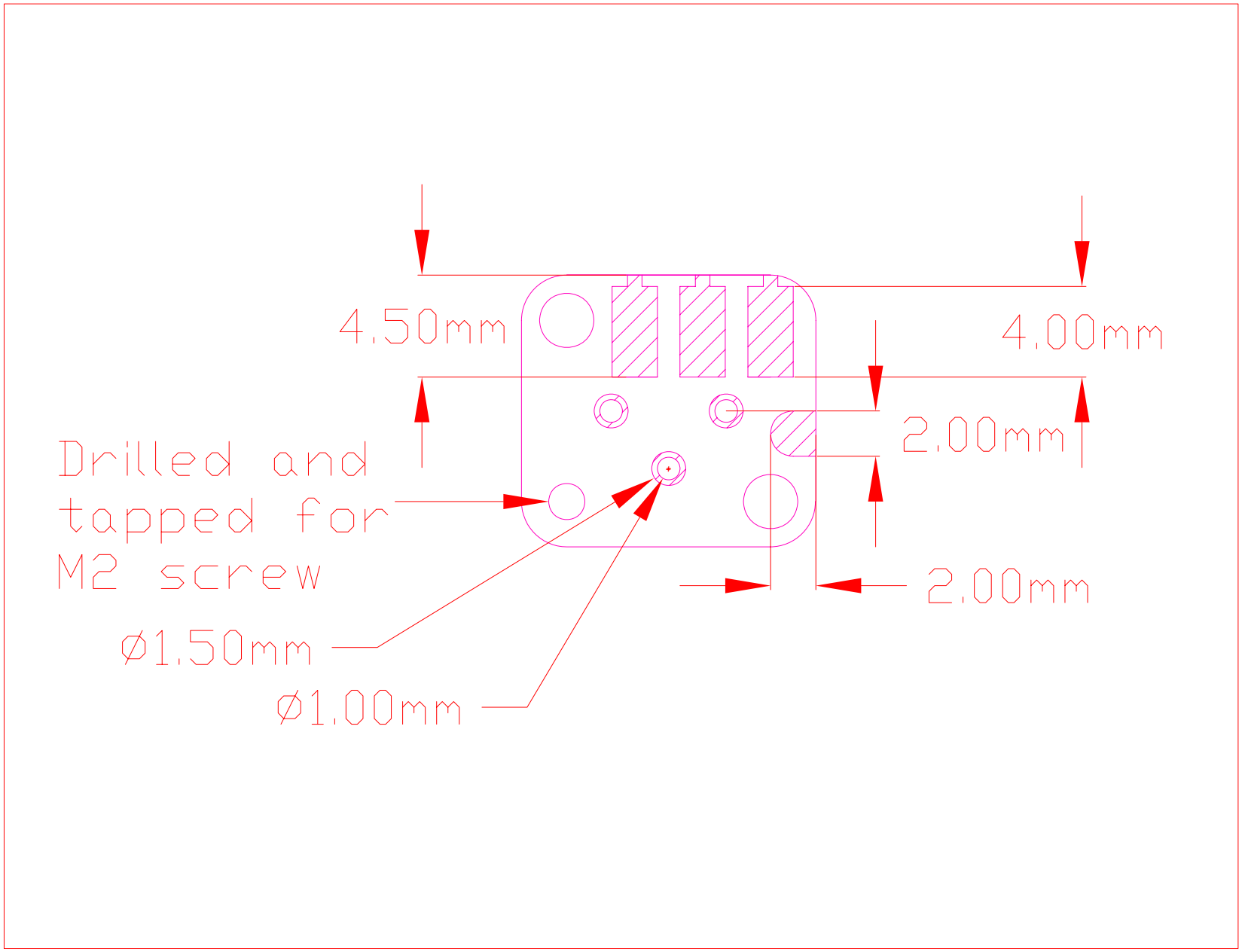
4.50mm
4.00mm
2.00mm
2.00mm
Drilled and
tapped for
M2 screw
Ø1.50mm
Ø1.00mm

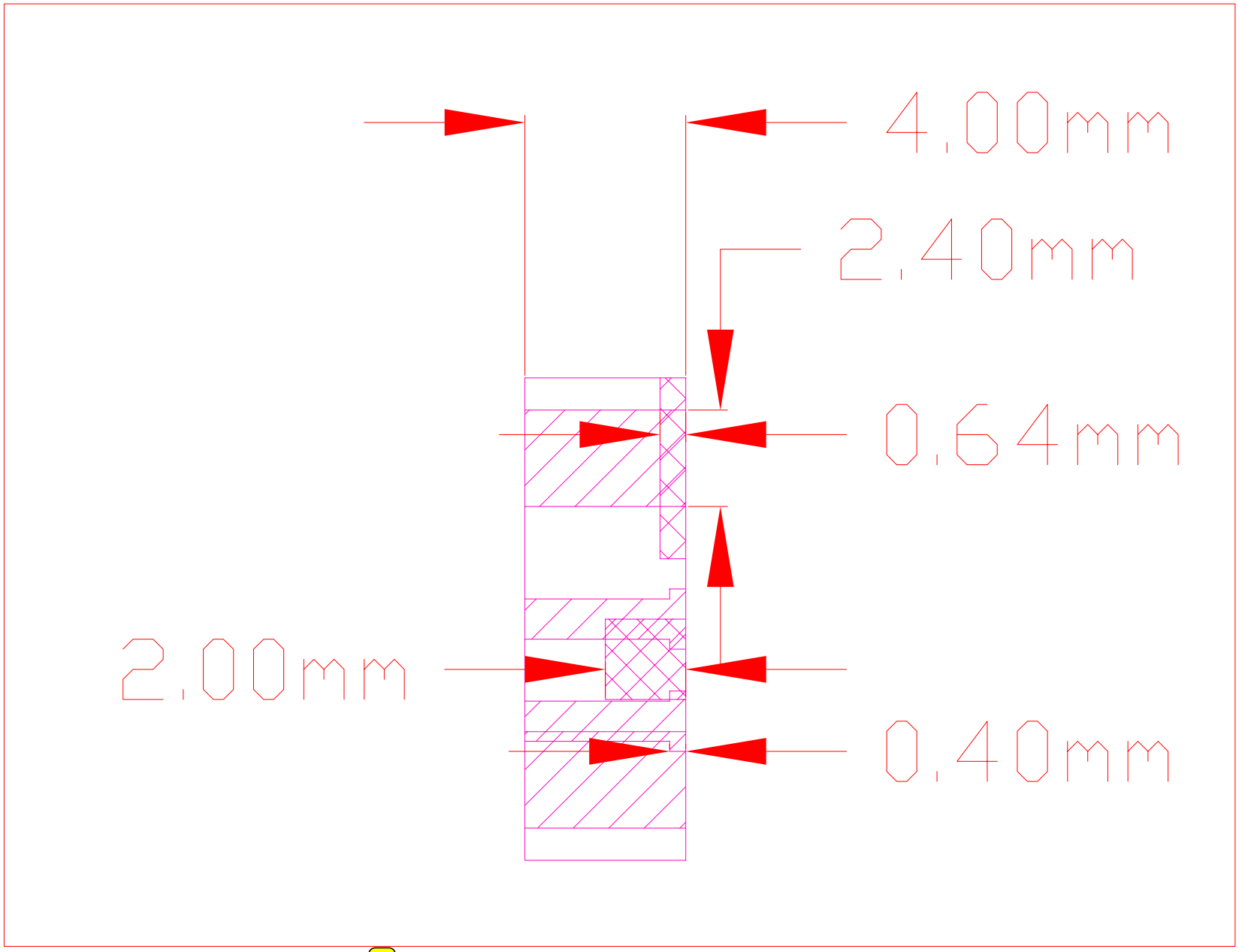
4.00mm
2.40mm
0.64mm
2.00mm
0.40mm