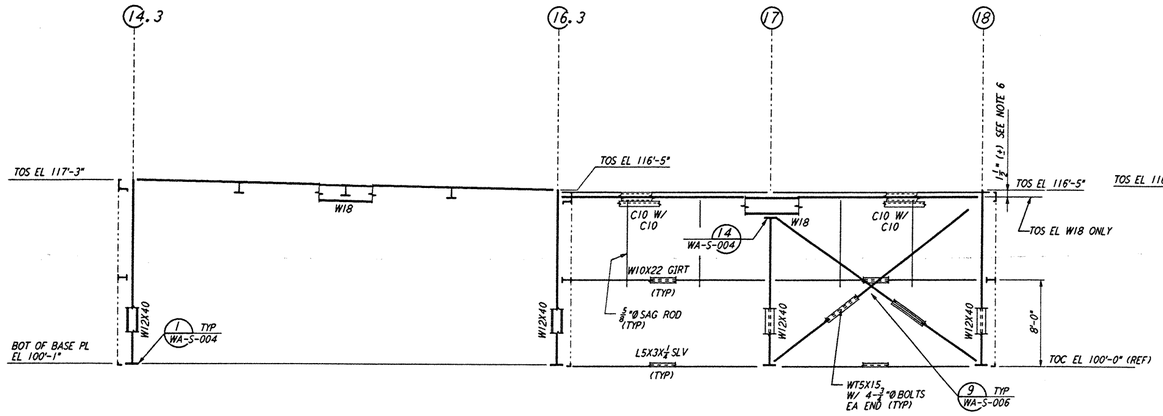

FRAMING ELEVATION AT COLUMN LINE U

3/16" = 1'-0"

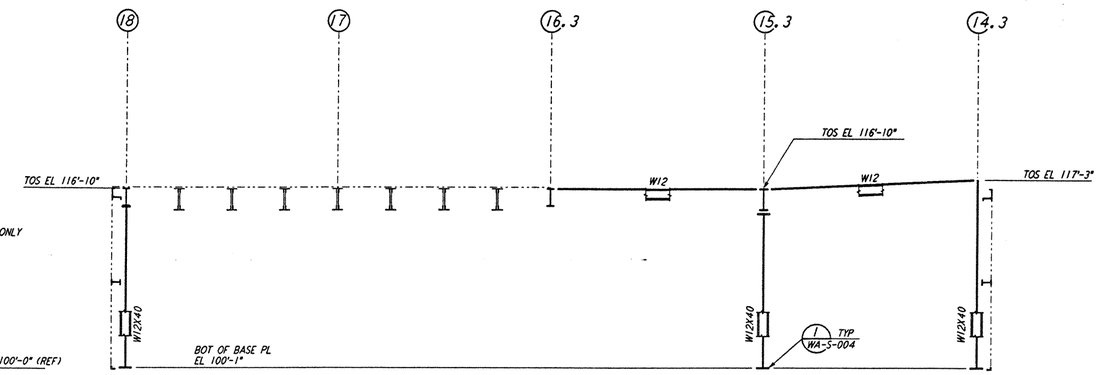

FRAMING ELEVATION AT COLUMN LINE V

3/16" = 1'-0"

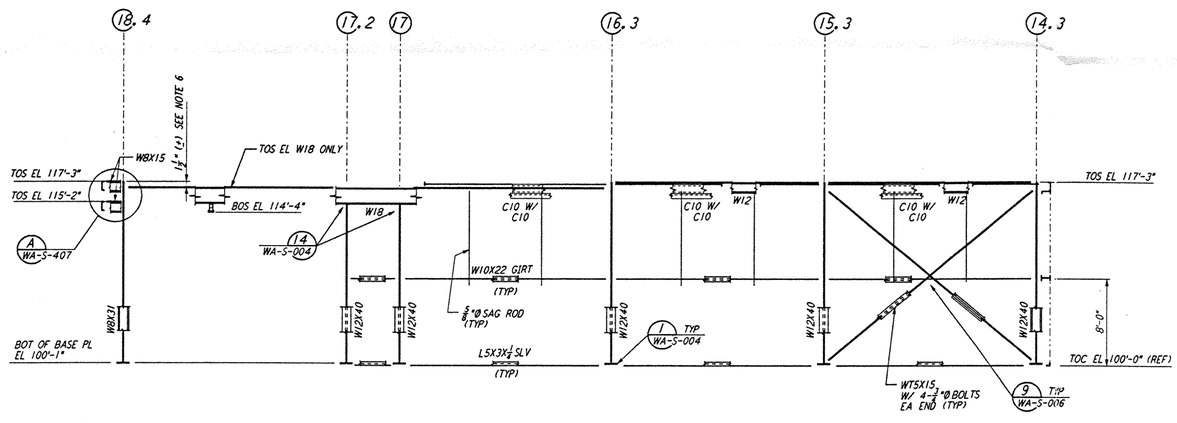

FRAMING ELEVATION AT COLUMN LINE W

3/16" = 1'-0"

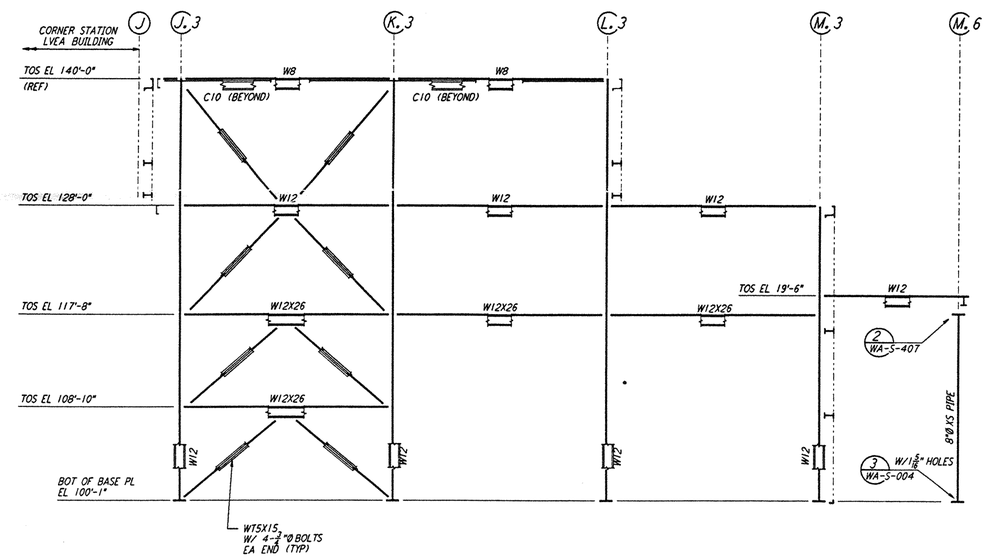

FRAMING ELEVATION AT COLUMN LINE 10.3

3/16" = 1'-0"

NOTES:

1. FOR GENERAL NOTES, ABBREVIATIONS AND SYMBOLS SEE DRAWING WA-S-001.
2. FOR CHANNEL, GIRT AND EAVE STRUT CONNECTION DETAILS SEE DRAWING WA-S-005.
3. FOR W BEAM TO COLUMN WEB/FLANGE CONNECTIONS, SEE DETAILS 6/WA-S-004, 3/WA-S-007 & 4/WA-S-007 TYPICAL UNLESS OTHERWISE NOTED.
4. FOR BASE ANGLE (L5X3) CONNECTIONS, SEE SECTION A/WA-S-003
5. FOR VERT BRCG CONNECTIONS SEE 2/WA-S-006 8/WA-S-006 1/WA-S-007 2/WA-S-007 TYP UON.
6. FABRICATOR TO ADJUST THIS DIMENSION BASED ON ACTUAL DEPTH OF THE TOP CHORD OF OPEN WEB JOISTS.

0 4 8 12 16 20FT

3/16" = 1'-0"

REFERENCES		REVISIONS						
DRAWING NO.	DESCRIPTION	NO.	DATE	BY	CHKD	ENGR	PROJ	DESCRIPTION

0 ISSUED FOR CONSTRUCTION		
DRAWN	MCS	6-24-96
CHECKED	dem	7-2-96
ENGINEER	[illegible]	6-27-96
PROJ	[illegible]	7/19/96

JAMES A. LAWRENCE, STATE OF WASHINGTON, 21876, REGISTERED PROFESSIONAL ENGINEER
EXPIRES 10-24-96

PARSONS
100 WEST WALNUT STREET
PASADENA, CALIFORNIA

LIGO
CALIFORNIA INSTITUTE OF TECHNOLOGY
MASSACHUSETTS INSTITUTE OF TECHNOLOGY

LASER INTERFEROMETER
GRAVITATIONAL-WAVE OBSERVATORY
SITE NO. 1 - HANFORD, WASHINGTON

TITLE: STRUCTURAL CORNER STATION OSB FRAMING ELEVATIONS SHEET 3

SCALE	CONTRACT NUMBER	PROJECT NUMBER
AS NOTED	PP150969	8094

SHEET NUMBER: WA-S-120
REVISIONS: 0

LIGO-D960300-00-O

LIGOWAF.BDR

This document and the design it covers are the property of PARSONS. They are loaned only with the borrower's expressed written agreement that they will not be reproduced, copied, loaned, exhibited, or used in any other way, except by written consent from PARSONS to the borrower.