This document and the design it covers are the property of **PARSONS**. They are loaned only with the borrower's expressed written agreement that they will not be reproduced, copied, loaned, exhibited, or used in any other way, except by written consent from **PARSONS** to the borrower.

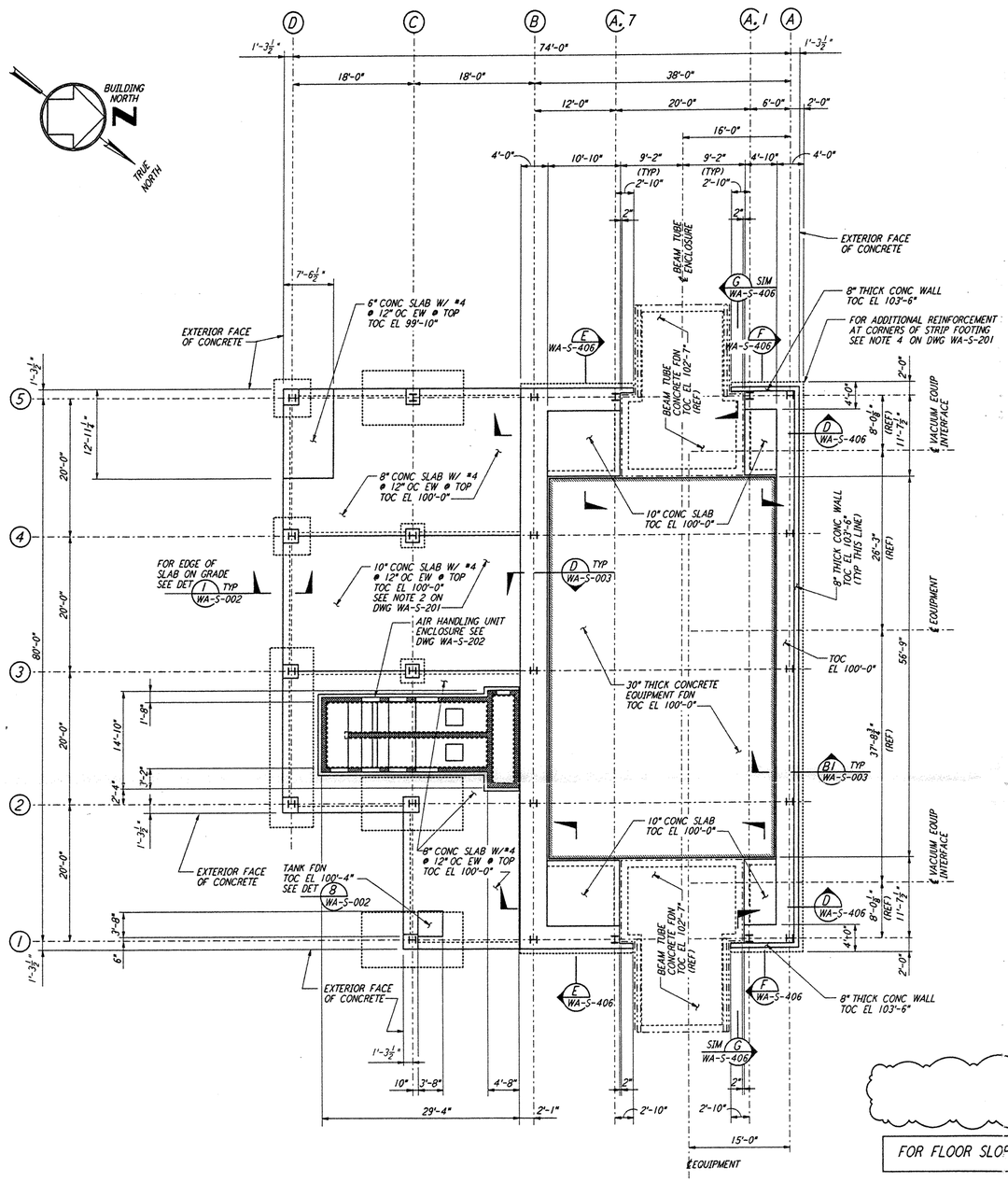

ARM 1 (SOUTHWEST ARM)

MID STATION "B" FOUNDATION PLAN

$\frac{1}{8}$" = 1'-0"

DATUM POINT EL 100'-0" = EL 532.22'

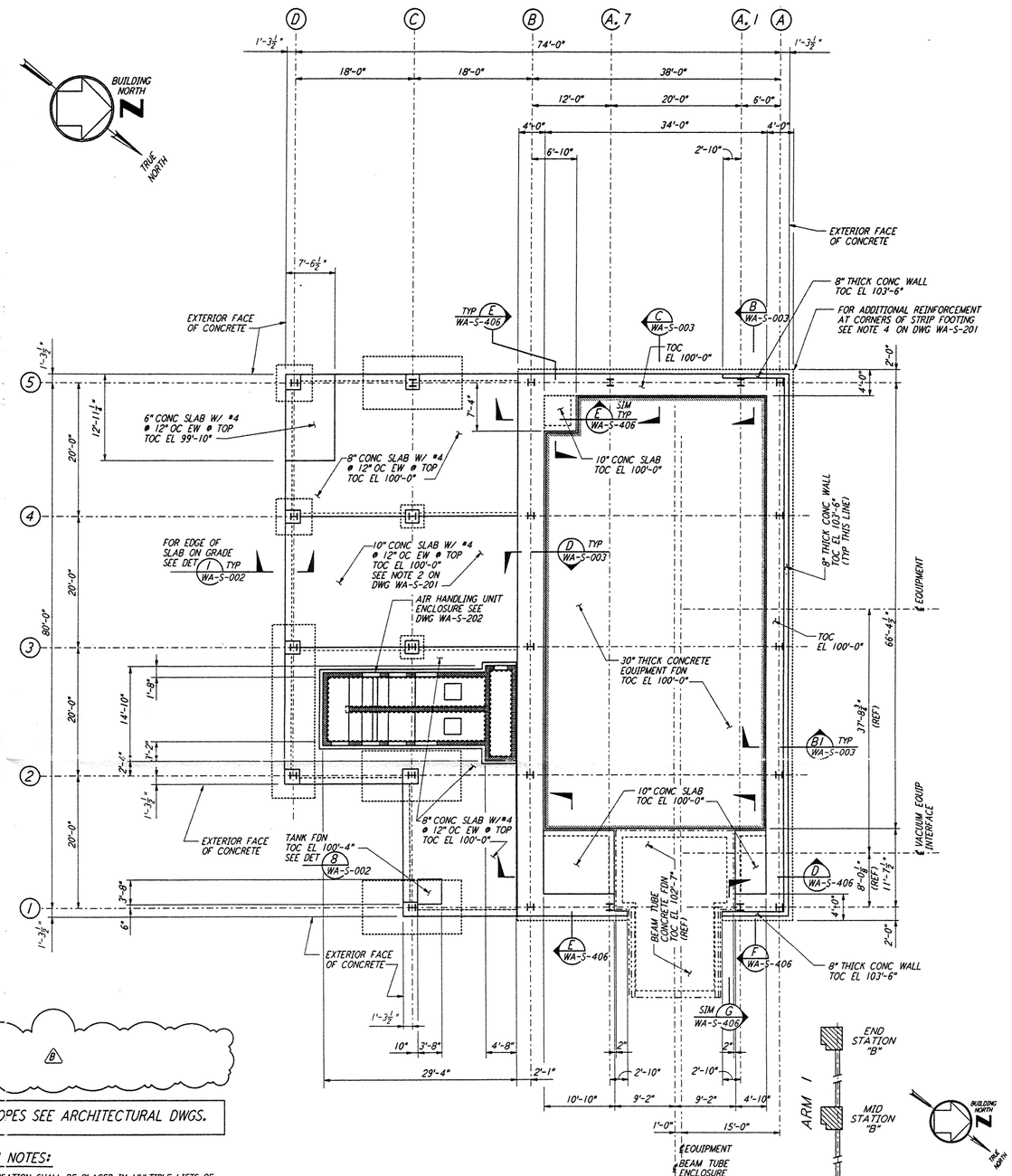

ARM 1 (SOUTHWEST ARM)

END STATION "B" FOUNDATION PLAN

$\frac{1}{8}$" = 1'-0"

DATUM POINT EL 100'-0" = EL 535.26'

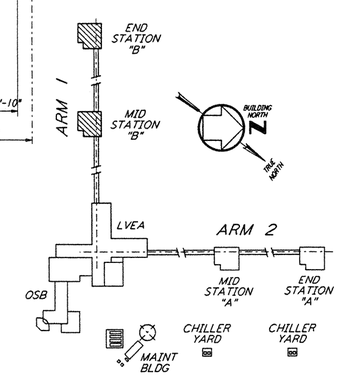

KEY PLAN

LIGO-D960314-B-O

FOR FLOOR SLOPES SEE ARCHITECTURAL DWGS.

EQUIPMENT FOUNDATION NOTES:

1. CONCRETE FOR EQUIPMENT FOUNDATION SHALL BE PLACED IN MULTIPLE LIFTS OF ONE (1) FOOT OR MORE WITH A FINAL LIFT OF SIX (6) INCHES.
2. FIBERMESH FIBERS (MANUFACTURED BY FIBERMESH, CHATTANOOGA, TENNESSEE OR EQUAL) SHALL BE MIXED WITH CONCRETE FOR THE FINAL LIFT OF SIX (6) INCHES FOR THE EQUIPMENT FOUNDATION.
3. CONCRETE SURFACE SHALL BE CLEANED, RAKED AND ROUGHENED TO DEVELOPE BOND BETWEEN CONCRETE LAYERS.
4. TOP REINFORCEMENT OF EQUIPMENT FOUNDATION SHALL HAVE $1\frac{1}{2}$" CLEAR COVER. CONTRACTOR SHALL TAKE ALL THE NECESSARY PRECAUTIONS TO MAINTAIN UNIFORM COVER.
5. CONTRACTOR SHALL HAVE SPARE PUMPS TO ENSURE UNINTERRUPTED PLACEMENT OF CONCRETE.
6. EQUIPMENT FOUNDATION SHALL BE CURED BY MEMBRANE CURING METHOD AS PER SPECIFICATIONS.
7. (B) THE WORK MARKED BY HAND ON THIS DRAWING IN REVISION "A" DATED 4-19-96 HAS BEEN RESTORED TO THIS CONTRACT.

NOTES:

1. FOR FOUNDATION SCHEDULE AND DETAILS, SEE DRAWING WA-S-401.

0 8 16 24 32FT

$\frac{1}{8}$" = 1'-0"

REFERENCES

DRAWING NO.	DESCRIPTION

REVISIONS

NO.	DATE	BY	CHKD	ENGR	PROJ	DESCRIPTION
B	5-22-96	MCS	DDM	BP	TDM	BID ADDENDUM #2
A	4-19-96	MCS	DDM	BP	TDM	FINAL DESIGN REVIEW & BID

DRAWN	MCS
CHECKED	
ENGINEER	
PROJ	

PARSONS
100 WEST WALNUT STREET
PASADENA, CALIFORNIA

LIGO
CALIFORNIA INSTITUTE OF TECHNOLOGY
MASSACHUSETTS INSTITUTE OF TECHNOLOGY

LASER INTERFEROMETER
GRAVITATIONAL-WAVE OBSERVATORY
SITE NO. 1 - HANFORD, WASHINGTON

TITLE: STRUCTURAL MID STATION "B" & END STATION "B" FOUNDATION PLANS

SCALE	CONTRACT NUMBER	PROJECT NUMBER
AS NOTED	PP150969	8094

SHEET NUMBER: WA-S-208 REVISIONS: B

LIGOWAF.BDR