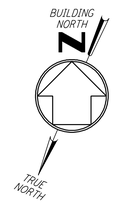

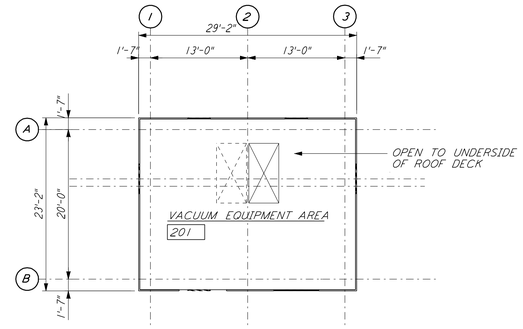

MID STATION "A"/ "B" REFLECTED CEILING PLAN (4 / LA-A-201)
1/8"=1'-0"

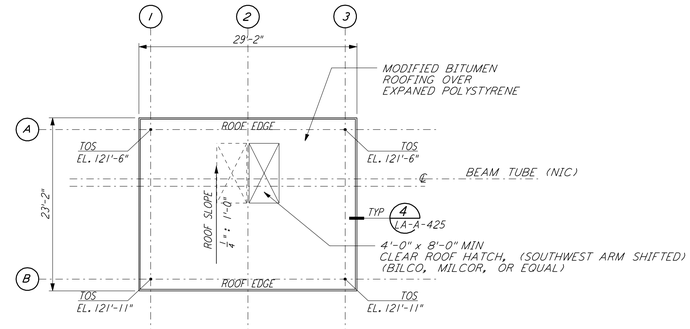

MID STATION "A" / "B" ROOF PLAN (1 / LA-A-201)
1/8"=1'-0"

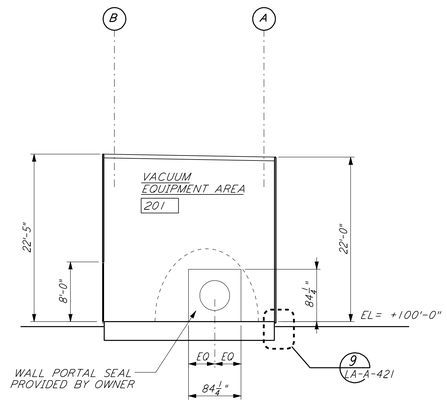

SECTION (A / LA-A-201)
1/8"=1'-0"

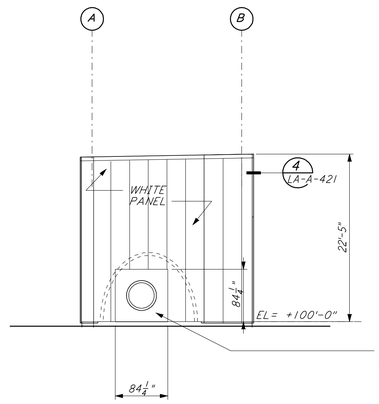

ELEVATION (A / LA-A-201)
1/8"=1'-0"

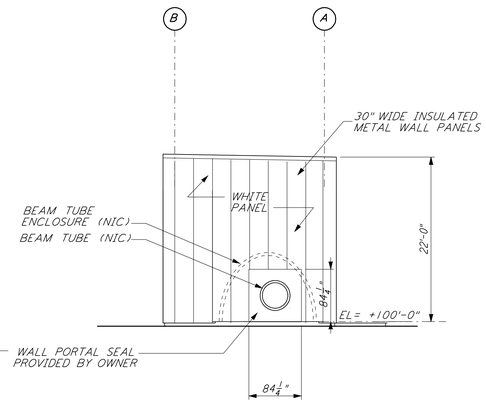

ELEVATION (C / LA-A-201)
1/8"=1'-0"

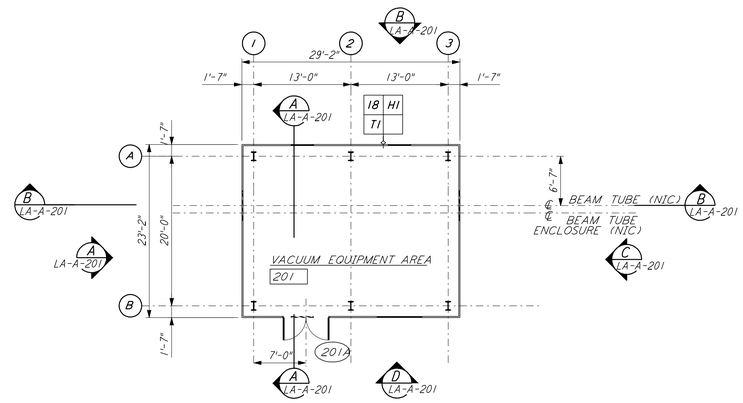

MID STATION "A" FLOOR PLAN (2 / LA-A-201)
1/8"=1'-0"

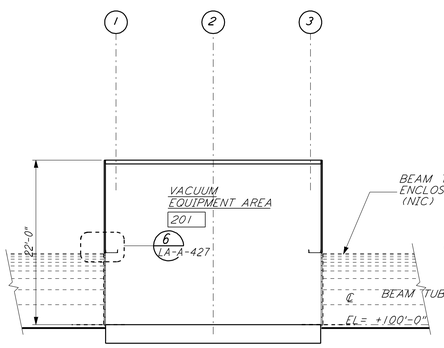

SECTION (B / LA-A-201)
1/8"=1'-0"

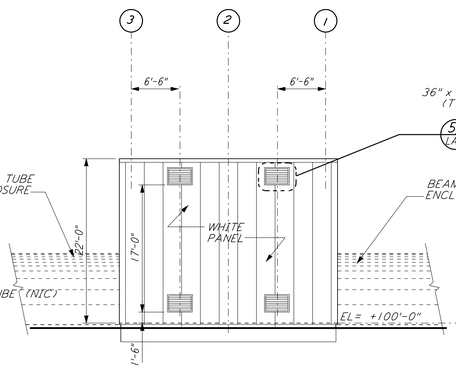

ELEVATION (B / LA-A-201)
1/8"=1'-0"

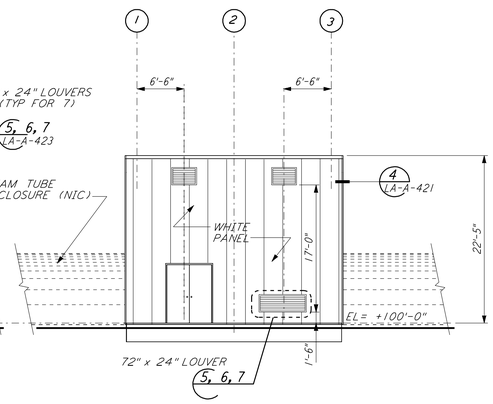

ELEVATION (D / LA-A-201)
1/8"=1'-0"

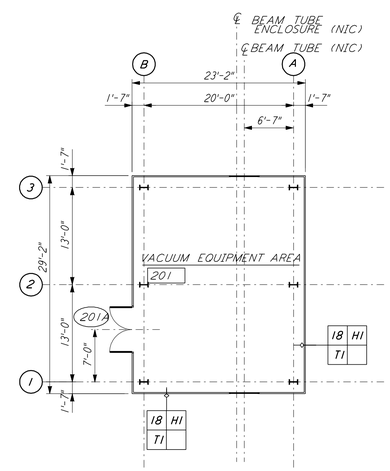

MID STATION "B" FLOOR PLAN (3 / LA-A-201)
1/8"=1'-0"

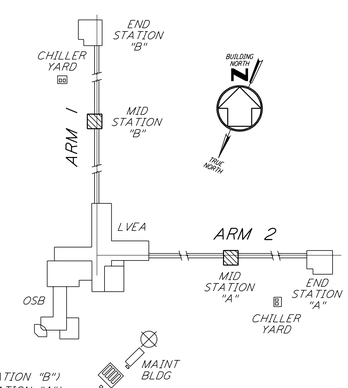

KEY PLAN

0 8 16 24 32FT
1/8" = 1'-0"

DATUM POINT EL +100.00 = 61.00' (MID STATION "B")
DATUM POINT EL +100.00 = 63.00' (MID STATION "A")

LIGO-D960892-02-O

REFERENCES		REVISIONS						
		2	08-07-98	SJM				ISSUED FOR AS-BUILT
		1	2-28-97	CKT	TB	AK	TDM	MID STATION REVISION
DRAWING NO.	DESCRIPTION	NO.	DATE	BY	CHKD	ENGR	PROJ	DESCRIPTION

ISSUED FOR CONTRUCTION		
DRAWN	CKT	11-15-96
CHECKED	TB	11-15-96
ENGINEER	SF	11-15-96
PROJ	MDW	11-15-96

AS-BUILT DRAWINGS

PARSONS
100 WEST WALNUT STREET
PASADENA, CALIFORNIA

LIGO
CALIFORNIA INSTITUTE OF TECHNOLOGY
MASSACHUSETTS INSTITUTE OF TECHNOLOGY

LASER INTERFEROMETER
GRAVITATIONAL-WAVE OBSERVATORY
SITE NO.2 - LIVINGSTON, LOUISIANA

TITLE: ARCHITECTURAL MID STATIONS PLANS/SECTIONS/ELEVATIONS

SCALE	CONTRACT NUMBER	PROJECT NUMBER
AS NOTED	PP150969	8094

SHEET NUMBER: LA-A-201
REVISIONS: 2

LIGOLAF3.BDR

This document and the design it covers are the property of PARSONS. They are loaned only with the borrower's expressed written agreement that they will not be reproduced, copied, loaned, exhibited, or used in any other way, except by written consent from PARSONS to the borrower.

Wed Oct 7 10:08:29 1998 c:\pilot\acf\S3-30.acf N:\QUEUES\E3082\AR201.PRF