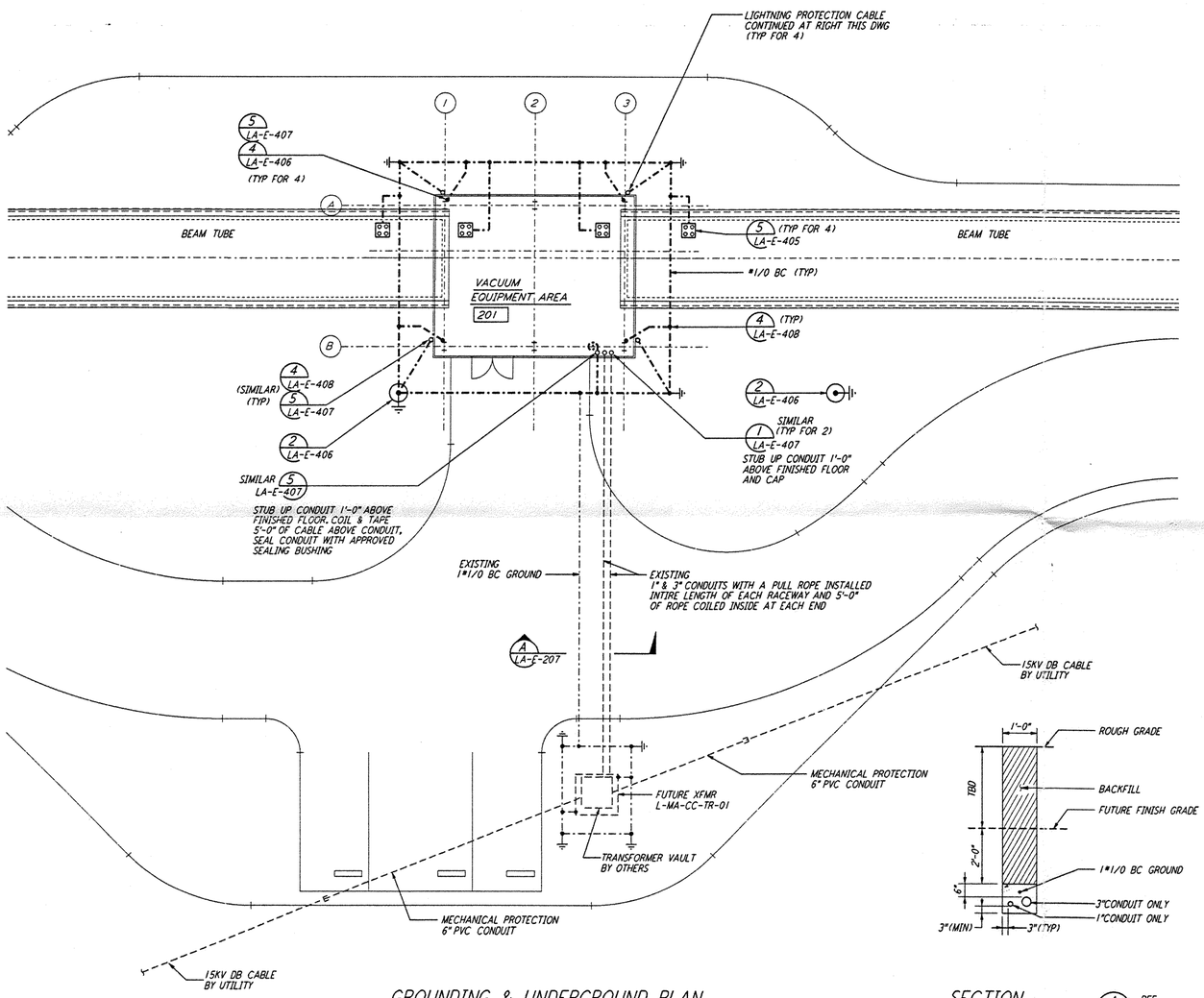

GROUNDING & UNDERGROUND PLAN

SECTION
NTS EXISTING DUCTBANK A REF LA-E-207

NOTES:

1. FOR GENERAL NOTES SEE DWG. LA-E-103.
2. CONNECT GROUNDING CONDUCTOR TO REBAR AT BOTTOM OF FOUNDATION. REBAR SHALL BE AT LEAST 20 FEET LONG AND 1/2" DIAMETER.
3. SEE CIVIL DRAWING LA-C-021 FOR ACTUAL LOCATION OF TRANSFORMER.
4. SEE SPECIFICATION SECTION 16670 FOR LIGHTNING PROTECTION MATERIAL.
5. GROUND CONNECTION TO STRUCTURAL STEEL SHALL BE EXOTHERMIC WELD TYPE, AND APPROPRIATE FOR THE CABLE AND STRUCTURAL STEEL.

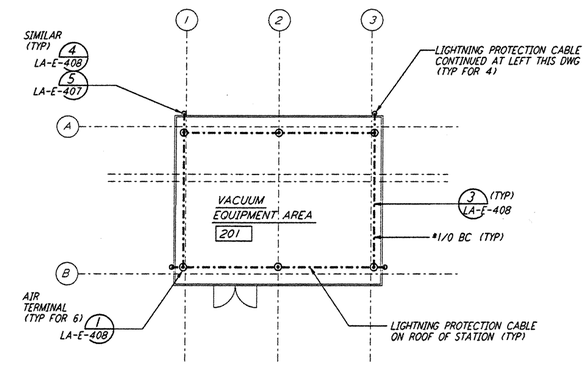

LIGHTNING PROTECTION PLAN

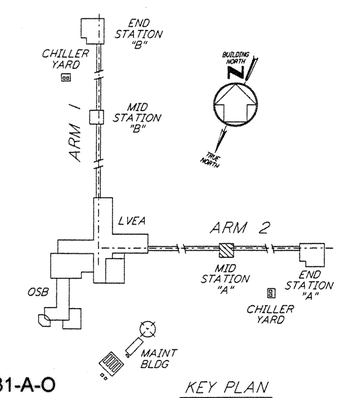

KEY PLAN

0 8 16 24 32FT
1/8" = 1'-0"

LIGO-D961031-A-O

REFERENCES		REVISIONS						
DRAWING NO.	DESCRIPTION	NO.	DATE	BY	CHKD	ENGR	PROJ	DESCRIPTION
		A	6-14-96	[illegible]	JCL	[illegible]	TOM	FINAL DESIGN REVIEW

DRAWN	M. M.	
CHECKED		
ENGINEER		
PROJ		

PARSONS
100 WEST WALNUT STREET
PASADENA, CALIFORNIA

LIGO
CALIFORNIA INSTITUTE OF TECHNOLOGY
MASSACHUSETTS INSTITUTE OF TECHNOLOGY

LASER INTERFEROMETER
GRAVITATIONAL-WAVE OBSERVATORY
SITE NO. 2 - LIVINGSTON, LOUISIANA

TITLE: ELECTRICAL MID STATION A GROUNDING & UNDERGROUND PLAN

SCALE	CONTRACT NUMBER	PROJECT NUMBER
AS NOTED	PP150969	8094

SHEET NUMBER: LA-E-207
REVISIONS: A

LIGOLAF3.BDR

This document and the design it covers are the property of PARSONS. They are loaned only with the borrower's expressed written agreement that they will not be reproduced, copied, loaned, exhibited, or used in any other way, except by written consent from PARSONS to the borrower.