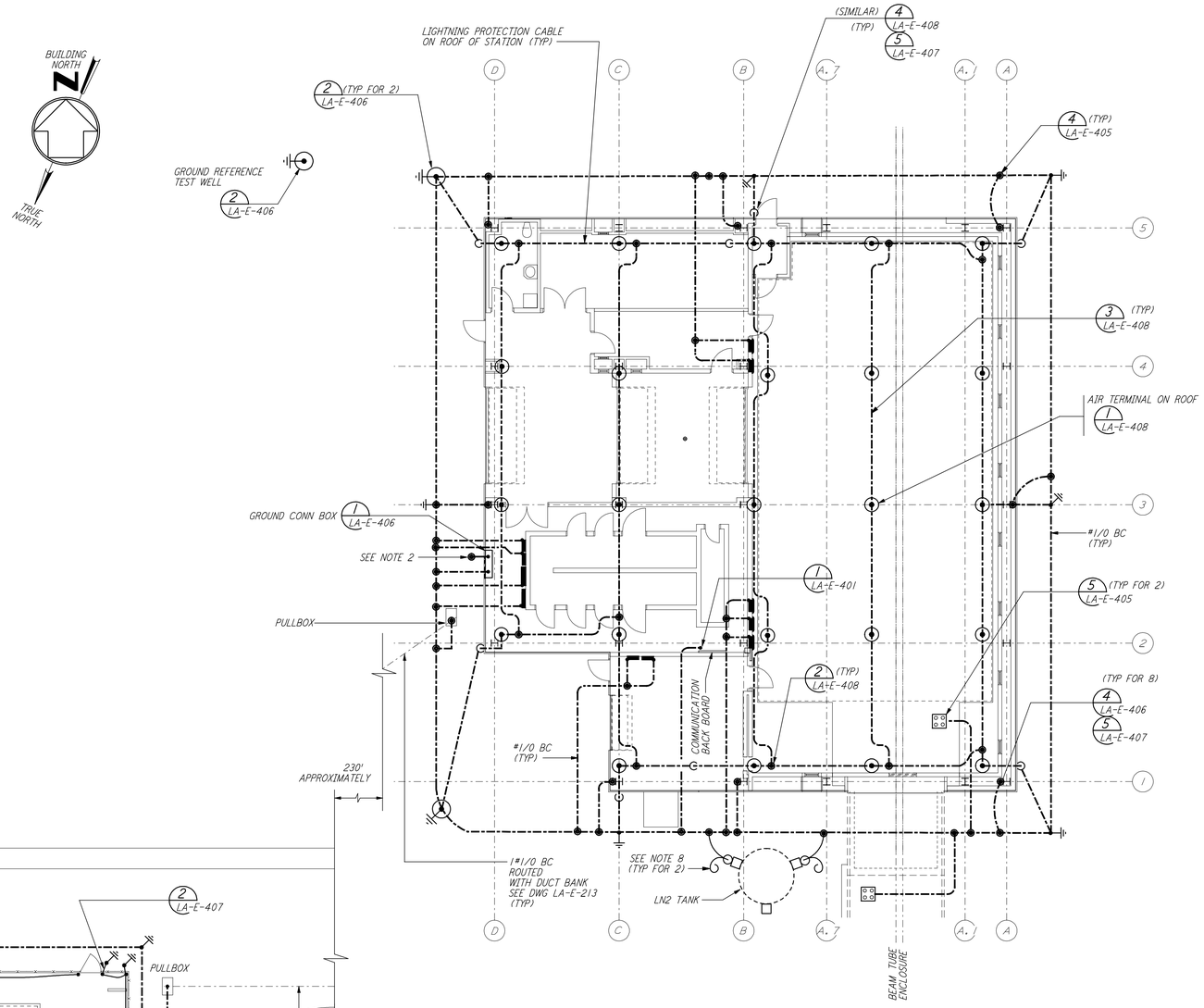

NOTES:

1. FOR GENERAL NOTES SEE DWG. LA-E-103.
2. CONNECT GROUNDING CONDUCTOR TO REBAR (BY OTHERS) AT BOTTOM OF FOUNDATION. REBAR SHALL BE AT LEAST 20 FEET LONG.
3. GROUNDING MAT FOR PERSONNEL PROTECTION SHALL BE A PREFABRICATED 4'-0" X 6'-0" MAT WITH A 6" X 6" GRID, 40% CONDUCTIVITY COPPERWELD, WITH CENTER WIRE # 1/0 AWG, ERICO MFR. CABLE TO MESH TYPE FT, MOLD FTC-1GZC, WELD METAL #65.
4. GROUNDING MAT SHALL BE INSTALLED 12" DEEP MIN. ADJACENT TO HIGH VOLTAGE PRIMARY SIDE.
5. SEE CIVIL DRAWING LA-C-021 FOR ACTUAL LOCATION OF CHILLERS, PUMPS AND TRANSFORMER.
6. SEE SPECIFICATION SECTION 16670 FOR LIGHTNING PROTECTION MATERIAL.
7. GROUND CONNECTION TO STRUCTURAL STEEL SHALL BE EXOTHERMIC WELD TYPE, AND APPROPRIATE FOR THE CABLE AND STRUCTURAL STEEL.
8. COIL AND TAPE GROUND CONDUCTOR AT TANK FOUNDATION, FOR FUTURE CONNECTION BY TANK VENDOR.

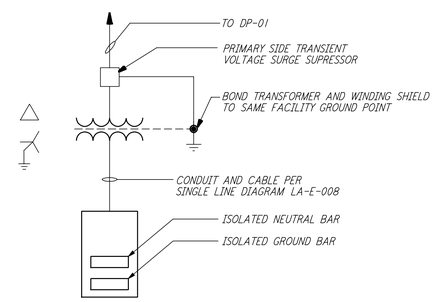

GROUNDING SCHEMATIC FOR CDSAC-01 PANEL

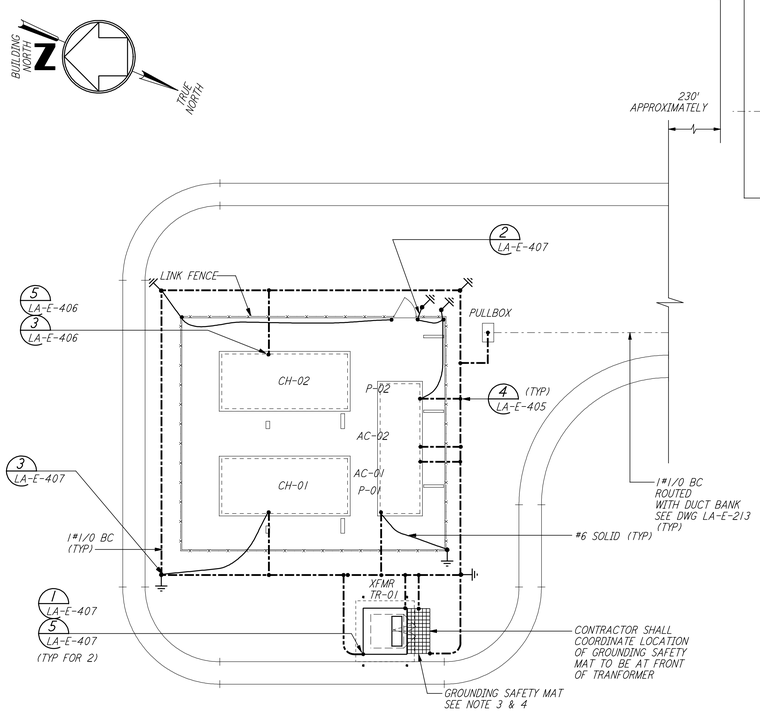

GROUNDING CHILLER PLAN

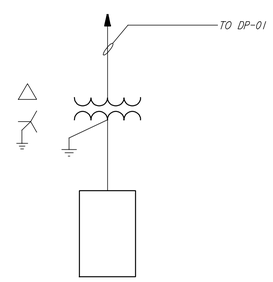

GROUNDING SCHEMATIC FOR RECEPTACLE PANEL RP-01

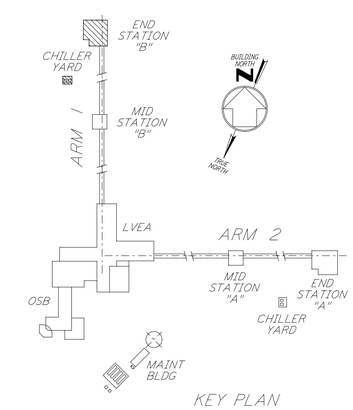

KEY PLAN

0 8 16 24 32FT
1/8" = 1'-0"

LIGO-D961033-02-O

REFERENCES		REVISIONS						
		2	5-21-99	AO				ISSUED AS REVISED AS-BUILT
		1	8-7-98	JE	AK	AG	MDW	ISSUED FOR AS-BUILT
DRAWING NO.	DESCRIPTION	NO.	DATE	BY	CHKD	ENGR	PROJ	DESCRIPTION

0 ISSUED FOR CONSTRUCTION		
DRAWN	M. M.	11-15-96
CHECKED	JCL	7-24-96
ENGINEER	KCR	10-25-96
PROJ	T. D. M.	11-15-96

AS-BUILT DRAWINGS

PARSONS
100 WEST WALNUT STREET
PASADENA, CALIFORNIA

LIGO
CALIFORNIA INSTITUTE OF TECHNOLOGY
MASSACHUSETTS INSTITUTE OF TECHNOLOGY

LASER INTERFEROMETER GRAVITATIONAL-WAVE OBSERVATORY
SITE NO.2 - LIVINGSTON, LOUISIANA

TITLE: ELECTRICAL END STATION B LIGHTNING & GROUNDING PLAN

SCALE	CONTRACT NUMBER	PROJECT NUMBER
AS NOTED	PP150969	8094

SHEET NUMBER: LA-E-212
REVISIONS: 2

LIGOLAF3.BDR

This document and the design it covers are the property of PARSONS. They are loaned only with the borrower's expressed written agreement that they will not be reproduced, copied, loaned, exhibited, or used in any other way, except by written consent from PARSONS to the borrower.