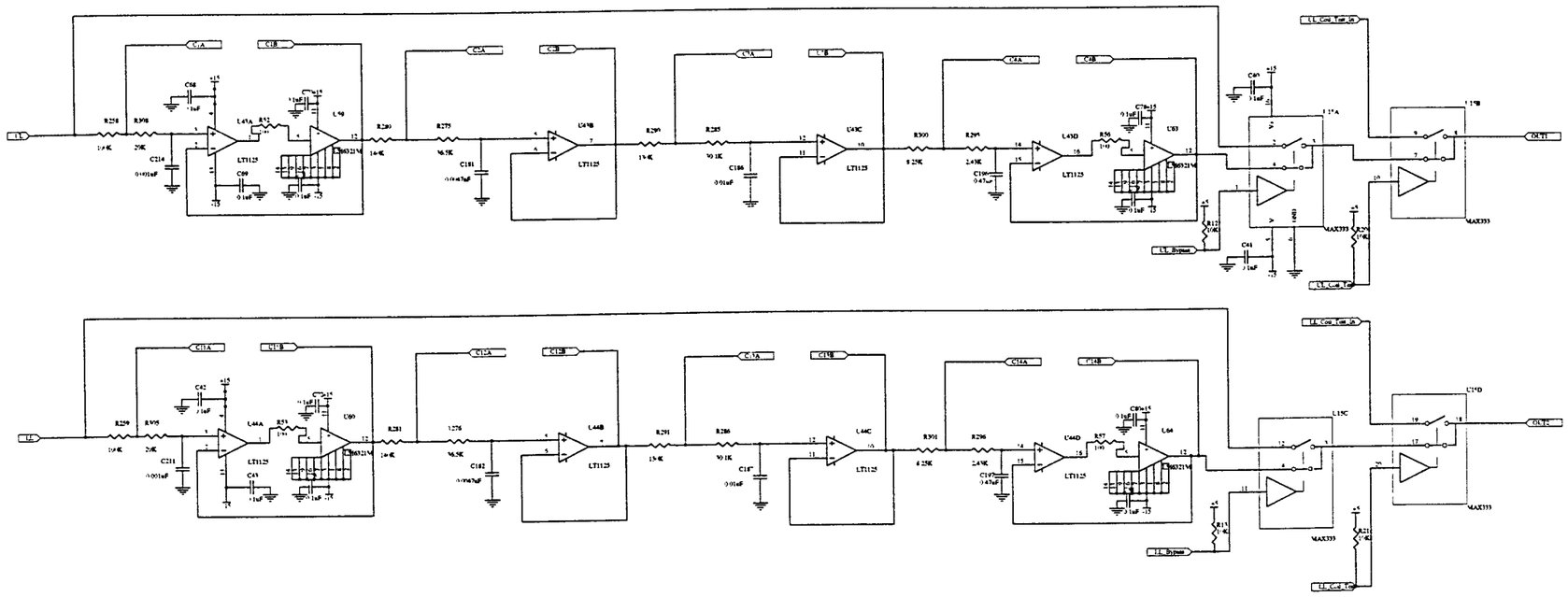

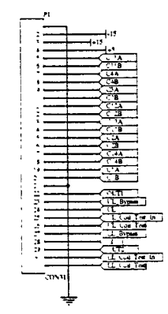

Title: SUS Filter SIP	LIGO Project, California Institute of Technology, Massachusetts Institute of Technology
Size: D	Number: D961291	Revision: 00	Engineer: J. Heptner	LIGO
Date: 1 ADVISORY/DIRECTOR/SIP	Sheet 1 of 1

LIGO-D961291-00-C