NOTES: (UNLESS OTHERWISE SPECIFIED)
1. INTERPRET DRAWING PER ANSI Y14.5M-1982.
2. INTERNAL CORNER RADII .06 MAX.
3. FORMED MATERIAL MUST BE FREE OF CRACKS.

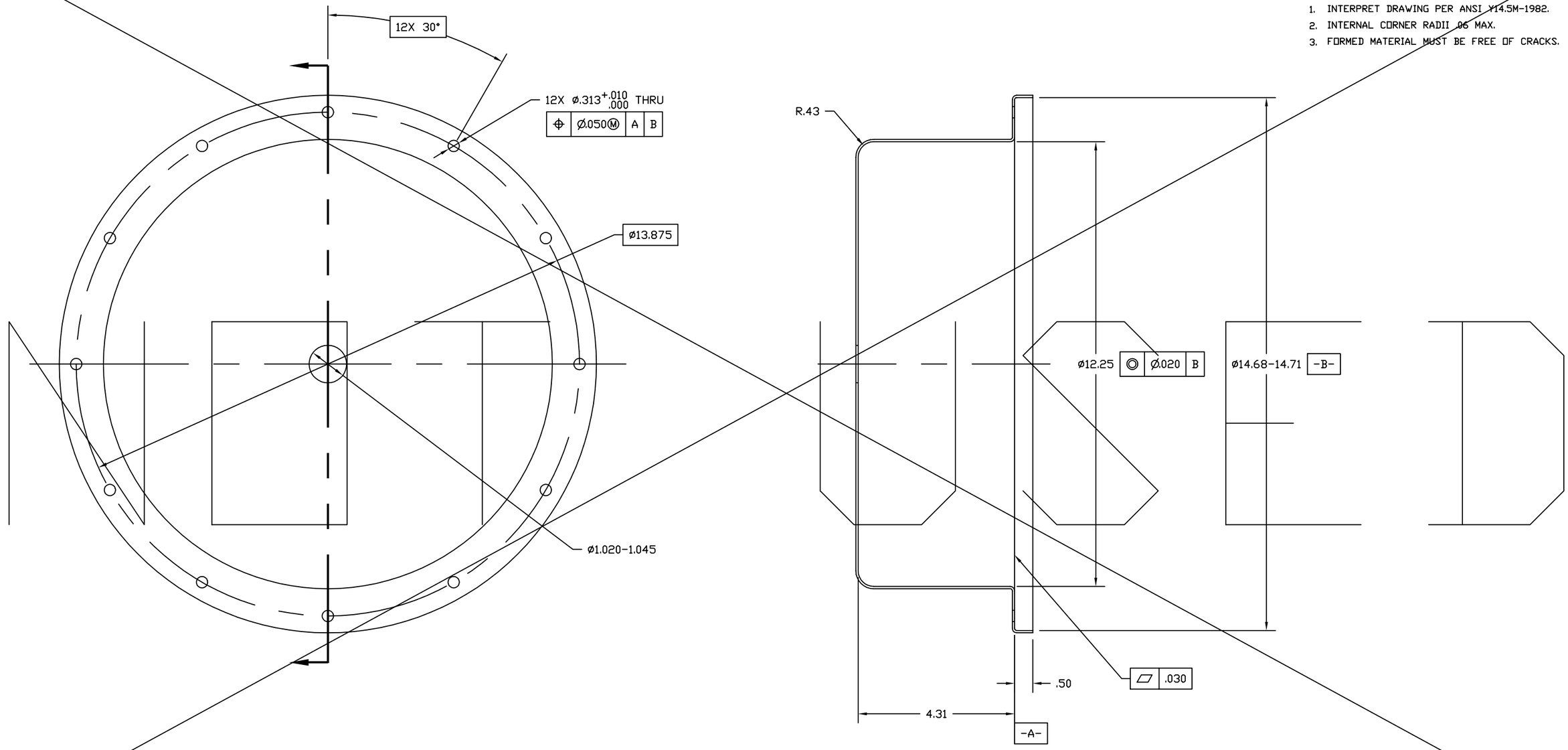

UNLESS OTHERWISE SPECIFIED
DIMENSIONS ARE IN INCHES

TOLERANCES:
FRACTIONAL ±
ANGULAR ± .5°
ANGULARMACH ± BEND ±
TWO PLACE DECIMAL ± .03

THREE PLACE DECIMAL ± .005
FINISHED SURFACE MICRONINCH AVERAGE
BREAK CORNERS IN: OUT: .005-.010
REMOVE ALL BURRS

MATERIAL:
6061 ALU SHEET, 1/16 THK
PER QQ-A-250/11

HEAT TREAT:
T6 PER AMS 2770

FINISH:

DWG. NO.	DESCRIPTION
REFERENCE DRAWINGS	

USED ON:
NEXT ASS'Y: D961420

REV	DESCRIPTION	DCC	SYS	DET	CDS	VE	CC	BT	CHECK	DRWN	DATE
A	DCN E960157										
pA	RELEASE FOR FAB										
00	PRE-RELEASE									CONLEY	12-4-96

ISSUE DESCRIPTION

LIGO CALIFORNIA INSTITUTE OF TECHNOLOGY
MASSACHUSETTS INSTITUTE OF TECHNOLOGY

BEAM SPLITTER OPTIC
CARRIER COVER

CAD FILE: D961417-A.dwg
SIZE: B
DWG. NO.: D961417-A-D
SCALE: NTS
SHEET: 1 OF 1