NOTES: (UNLESS OTHERWISE SPECIFIED)
1. INTERPRET DRAWING PER ANSI Y14.5M-1982

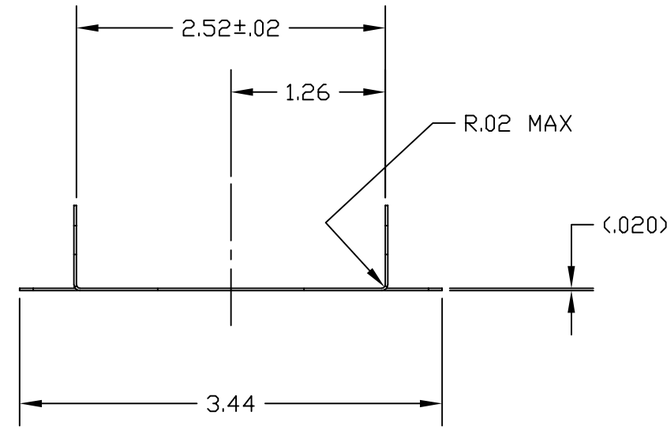

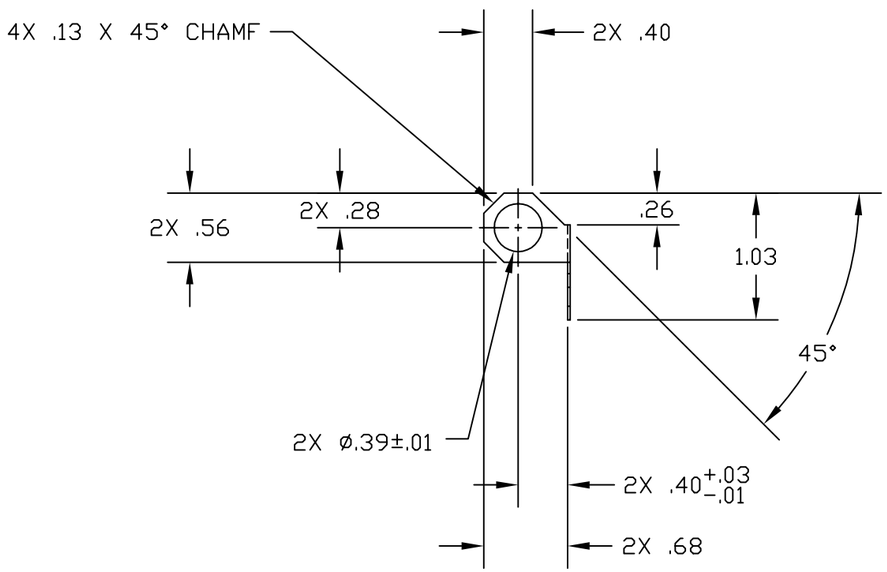

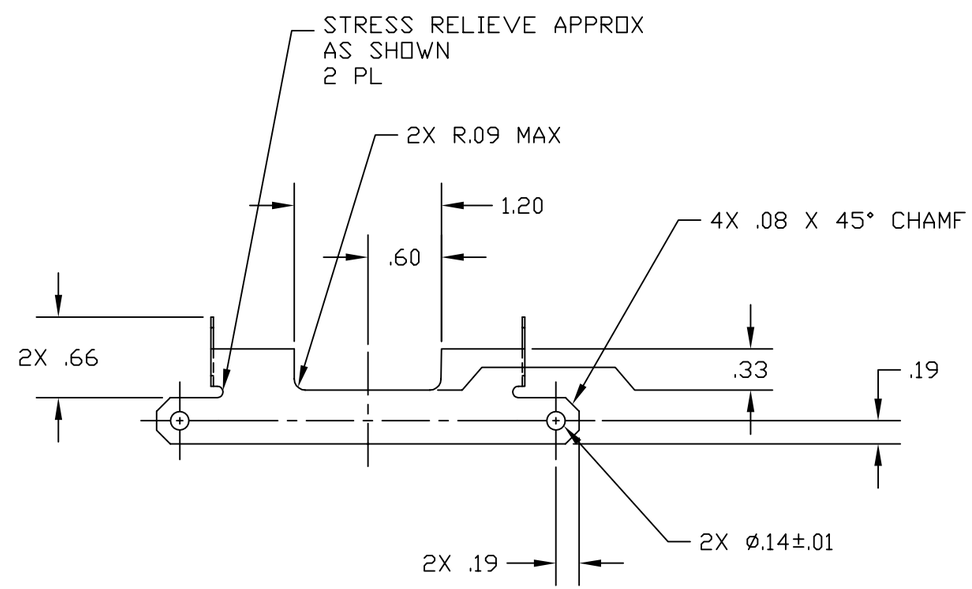

UNLESS OTHERWISE SPECIFIED
DIMENSIONS ARE IN INCHES

TOLERANCES:
FRACTIONAL ±
ANGULAR ± 1°
ANGULARMACH ± BEND ± 1°
TWO PLACE DECIMAL ± .01

THREE PLACE DECIMAL ±
FINISHED SURFACE 32 MICROINCH AVERAGE
BREAK CORNERS IN OUT:
REMOVE ALL BURRS

MATERIAL: .020 STAINLESS STEEL SHEET 301, 302, or 304
HEAT TREAT:
FINISH: NONE

USED ON:
NEXT ASS'Y: D970168

DWG. NO.	DESCRIPTION
REFERENCE DRAWINGS	

REV	DESCRIPTION	DCC	SYS	DET	CDS	VE	CC	BT	DRWN	CHECK	DATE
B	DCN E970059								CONLEY		
A	DCN E970007								CONLEY	COYNE	4-29-96

ISSUE DESCRIPTION

LIGO CALIFORNIA INSTITUTE OF TECHNOLOGY
MASSACHUSETTS INSTITUTE OF TECHNOLOGY

CORE OPTICS COMPONENT CARRIER
PROTECTIVE SHEET BRACKET

CAD FILE	SIZE	DWG. NO.
D970166-B.dwg	B	D970166-B-D
SCALE NTS		SHEET 1 OF 1