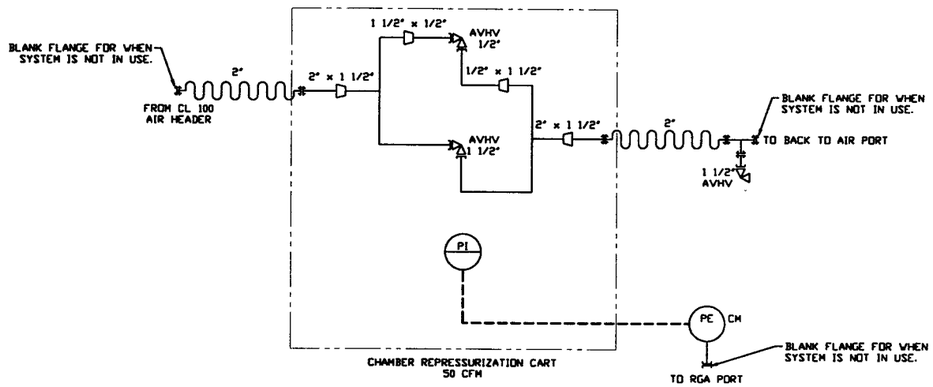

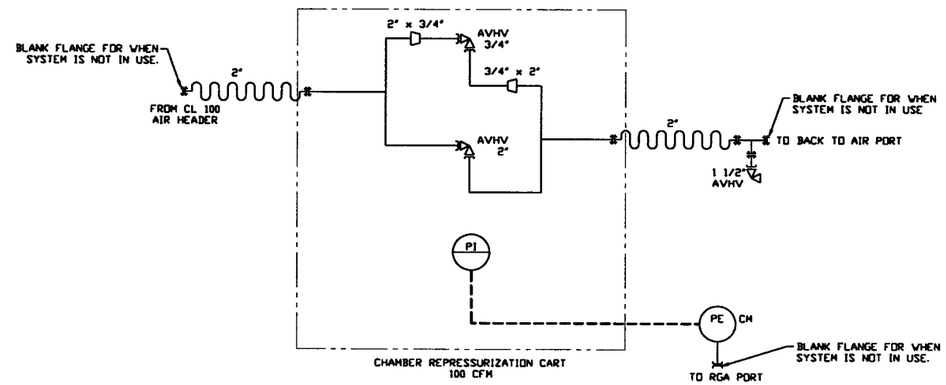

LIGO-D9: 1331-00-V

PROPRIETARY AND CONFIDENTIAL

THIS DOCUMENT CONTAINS PROPRIETARY INFORMATION BELONGING TO PROCESS SYSTEMS INTERNATIONAL, INC. OR ITS SUBSIDIARIES AND/OR COMPANIES AND SHALL BE USED FOR THE PURPOSE FOR WHICH IT WAS SUPPLIED. IT SHALL NOT BE REPRODUCED OR OTHERWISE USED, NOR SHALL SUCH INFORMATION BE FURNISHED IN WHOLE OR IN PART TO OTHERS EXCEPT IN ACCORDANCE WITH THE TERMS OF ANY AGREEMENT UNDER WHICH IT WAS SUPPLIED OR WITH THE PRIOR WRITTEN CONSENT OF PROCESS SYSTEMS INTERNATIONAL, INC. AND SHALL BE RETURNED UPON REQUEST.

DWG. NO.	DESCRIPTION	DWG. NO.	DESCRIPTION
V049-0-001	P & ID LEGEND		

REFERENCE DRAWINGS

UNLESS OTHERWISE SPECIFIED
DIMENSIONS ARE IN INCHES
TOLERANCES:
FRACTIONAL ±
ANGULAR: MACH ±0°-30' BEND ±2°
TWO PLACE DECIMAL ± .01
THREE PLACE DECIMAL ± .005
FINISHED SURFACE RMS
BREAK CORNERS ON OUT
REMOVE ALL BURRS

DO NOT SCALE THIS DRAWING

USED ON:

NEXT ASS'Y:

REV	DESCRIPTION	CHKD	DRWN	DATE	ECO#
0	ISSUE FOR FDR UPDATE	TS	DJ	10.25.96	0309

ISSUE DESCRIPTION

PROCESS SYSTEMS INTERNATIONAL INC.
20 WALKUP DR. WESTBOROUGH, MASSACHUSETTS 01581 USA

PIPING & INSTRUMENTATION DIAGRAM
LIGO VACUUM EQUIPMENT
CHAMBER REPRESSURIZATION SYSTEM
50 CFM & 100 CFM

CAD FILE	SIZE	DWG. NO.	REV.
V0490007	D	V049-0-007	0

SCALE NONE

SHEET 1 OF 1