REV	DATE	DRAWN BY	CHECKED	DCC	DCN/DESCRIPTION
A	6-19-98	J. HAZEL			E980089/INITIAL RELEASE

NOTES: (UNLESS OTHERWISE SPECIFIED)
1. BREAK ALL SHARP EDGES.
2. SPECIFICATIONS FOR THE CONSTRUCTION OF THIS ASSEMBLY ARE COVERED IN THE LARGE OPTIC SUSPENSION SPECIFICATION, LIGO E970038.

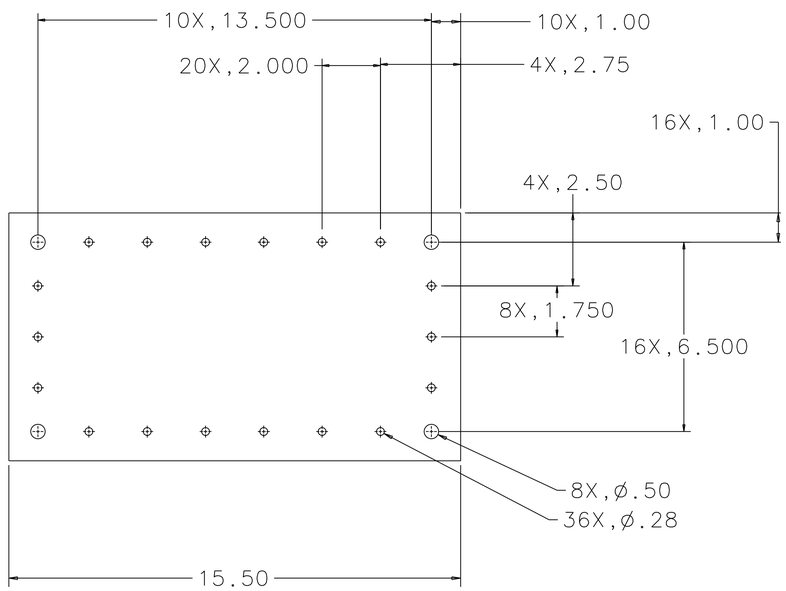

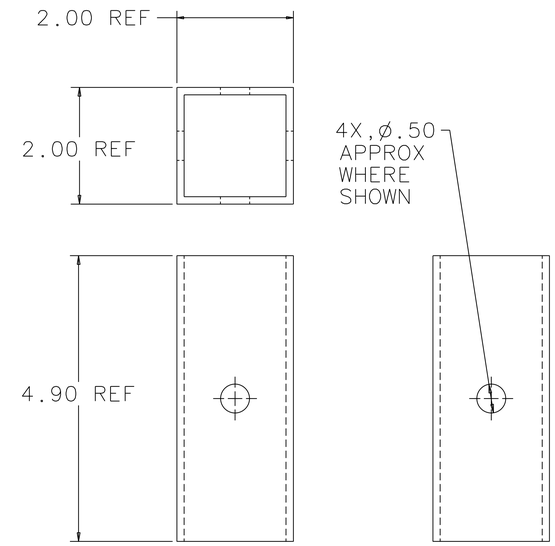

LEG DETAIL
SCALE 1/1

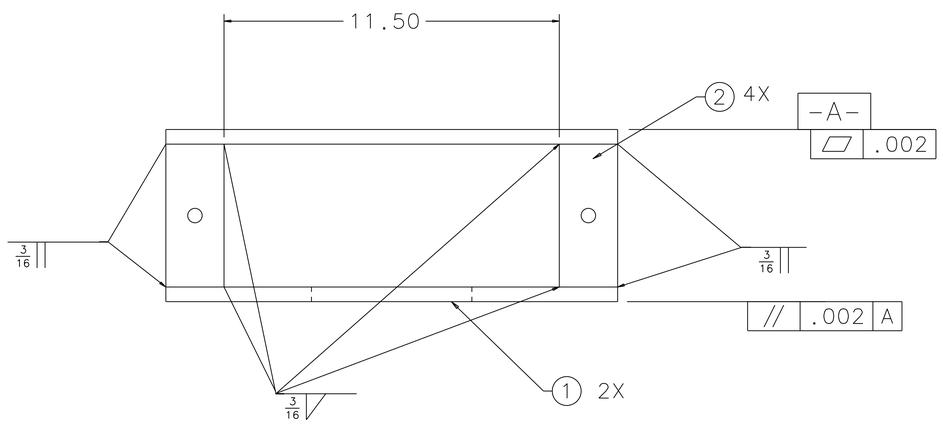

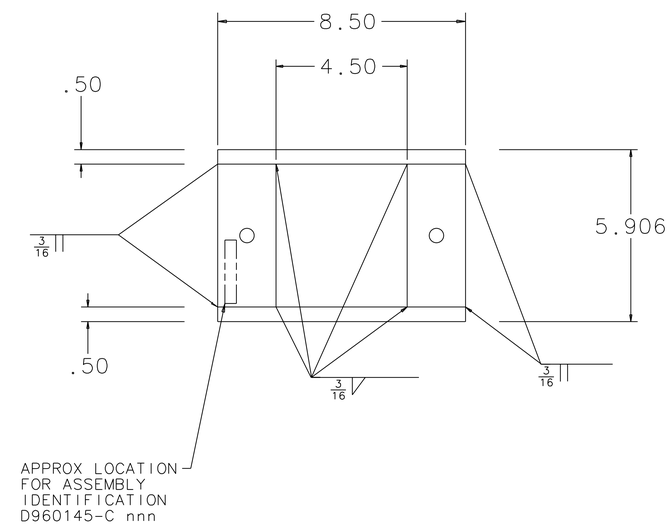

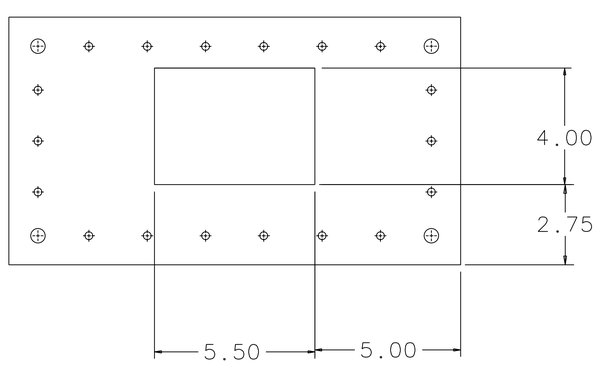

QTY REQD	PART OR IDENTIFYING NO	NOMENCLATURE OR DESCRIPTION	MATERIAL SPCIFICATION	ITEM NO.
4		LEGS: 2.0 x 2.0 x .125 WALL THICKNESS	304 STAINLESS	2
2		PLATES: 15.5 x 8.5 x .5 (REF)	304 STAINLESS	1

PARTS LIST

UNLESS OTHERWISE SPECIFIED DIMENSIONS ARE IN INCHES
TOLERANCES ARE:
FRACTIONS DECIMALS ANGLES
0.XX=±0.01
0.XXX=±0.005
ANGLES=±0.5°
DO NOT SCALE DRAWING

APPROVALS	DATE
DRAWN J. Hazel	5/98
CHECKED	

LIGO CALIFORNIA INSTITUTE OF TECHNOLOGY
MASSACHUSETTS INSTITUTE OF TECHNOLOGY

TITLE LOS3 HEIGHT ADAPTER FOLDING MIRROR

NEXT ASSEMBLY D970507
MATERIAL 304 STAINLESS
FILE LOCATION home/dcc/docs/D970569.pdf
FINISH SEE NOTES

SIZE E D970569 REV A
SCALE 1/2 SHEET 1 OF 1