REVISIONS				
LTR	REL DATE	DESCRIPTION	APPR	DATE
A		DCN E030398-00		

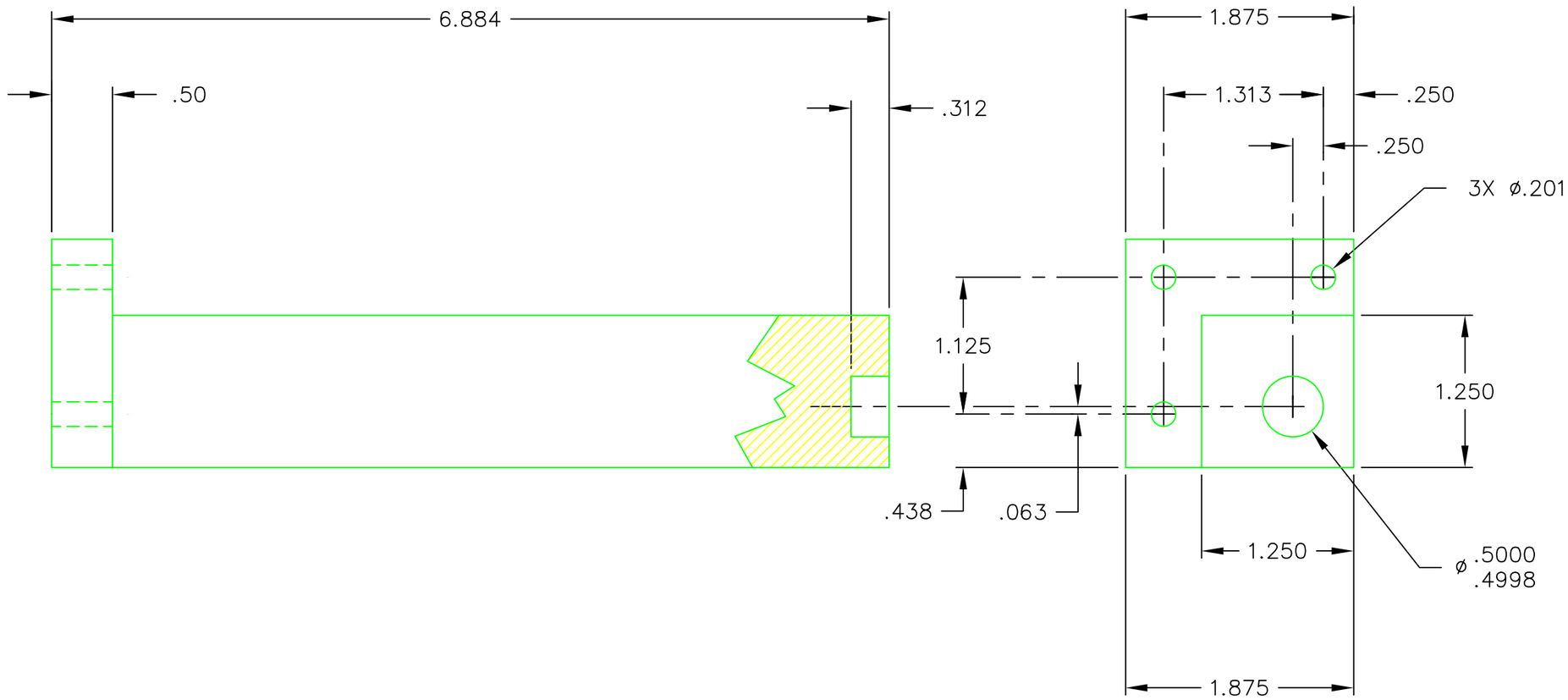

UNLESS OTHERWISE SPECIFIED DIMENSIONS ARE INCHES

TOLERANCES ON
FRACTIONS ± 1/16
DECIMALS .XX ± .010 .XXX ± .005
ANGLES ± 1/2°
BREAK ALL SHARP EDGES .005 TO .015 MAX. AND DEBURR

MATERIAL
6061-T6 ALUMINUM

FINISH
BLACK ANODIZE

DRAWN IVANHOE	3/20/97	CC DESIGN DEVELOPMENT
CHECKED		310-534-5620 TORRANCE CA
DESIGN APPROVAL		TITLE POST, BALL #1
PROJECT APPROVAL		
SIZE B	DWG NO. D970637	3215
SCALE FULL	QTY 1	SHEET 1 OF 1