REVISIONS			
REV	DESCRIPTION	DATE	APPROVED
A	SEE ECN# D972112-A FOR CHANGE LIST	05/14/98	T. THOMPSON
B	SEE ECN# D972112-B FOR CHANGE LIST	03/16/99	T. THOMPSON

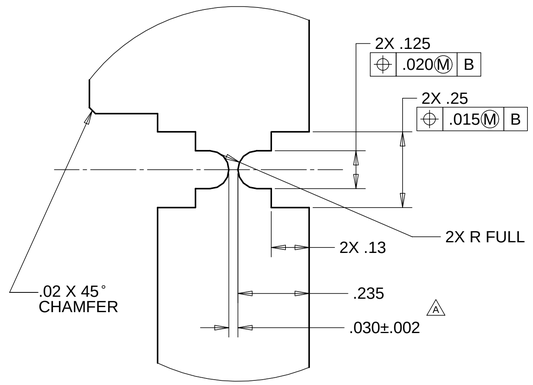

DETAIL A
TYP 2X

SCALE 4/1

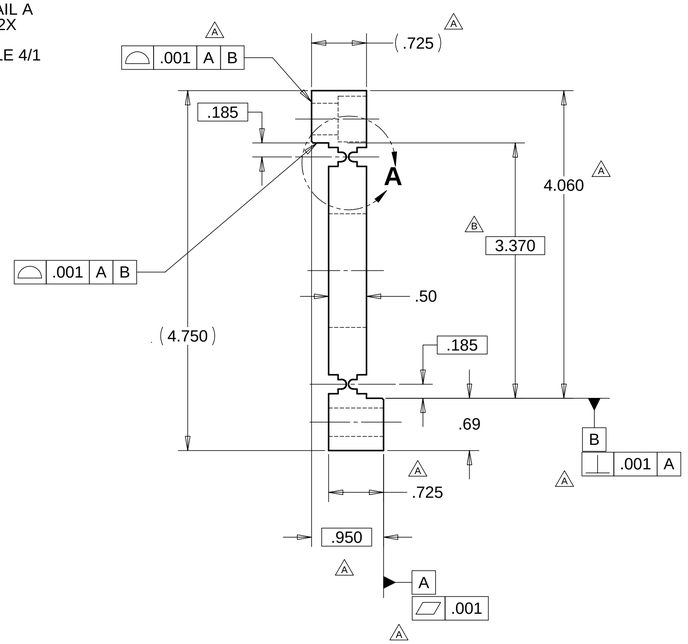

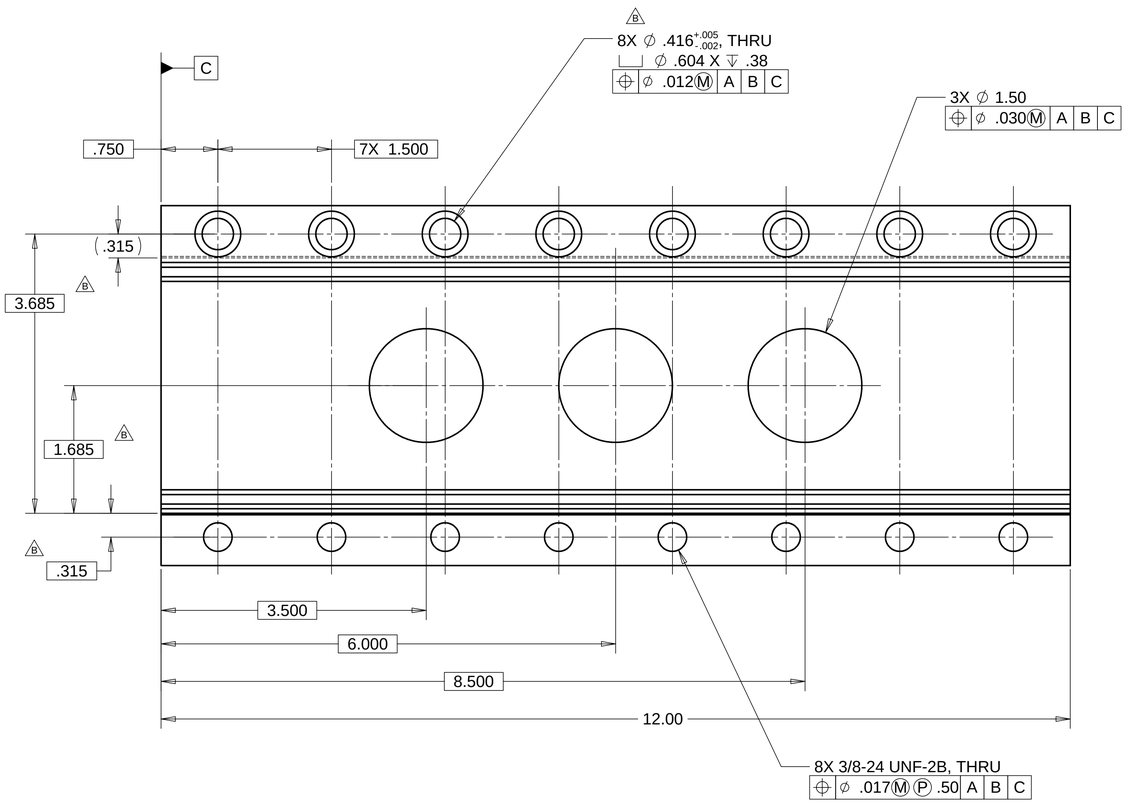

NOTES: UNLESS OTHER WISE SPECIFIED

1. ALL DIMENSIONS IN INCHES
2. DIMENSIONS AND TOLERANCING PER ANASI Y14.5M-1994
3. SURFACE TEXTURE PER ANI/ASME B 46.1-1985
4. REMOVE ALL BURRS AND BREAK SHARP EDGES TO A MAXIMUM OF .015
5. ALL INSIDE CORNERS TO BE .015 RADIUS MAX
6. COUNTERSINK 82 DEGREES ALL TAPPED HOLES TO MAJOR DIAMETER
7. COUNTERSINK 82 DEGREES APPROXIMATELY .03/.06 DEEP ALL DRILLED HOLES
8. PARTS TO BE THOROUGHLY CLEANED TO REMOVE ALL OIL, GREASE, DIRT AND CHIPS
9. PART NUMBER (DRAWING NO. PLUS DASH NO. PLUS SERIAL NO.) TO BE CLEARLY MARKED ON THE PART ITSELF.

MATL: 17-4PH STAINLESS STEEL - H900

WEIGHT: 7.6 lbs.

PARTS LIST

UNLESS OTHERWISE SPECIFIED:
DIMENSIONS ARE IN INCHES
-TOLERANCES-
DECIMALS
.X = +/- .1
.XX = +/- .03
.XXX = +/- .010
ANGULAR = +/- 30'
SURFACE FINISH = 250

CAD GENERATED DRAWING,
DO NOT MANUALLY UPDATE
DO NOT SCALE DRAWING

HYTEC, INC

TITLE
LIGO
FINE X TRANSLATION
FLEXURE - B

	SIGNATURE	DATE
DESIGNED	ROGER L. SMITH	10-22-97
DRAWN	ROGER L. SMITH	15-20-97
CHECKED	HARRY SALAZAR	11-28-97
ENGR.	ERIC PONSLET	12-01-97
APPROVED	T. THOMPSON	11-21-97

FINISH

PART NO. D972112-1

DWG. NO. D972112 | SIZE D | SHEET NO. 1 of 1

SCALE 1/1 | REVISION B