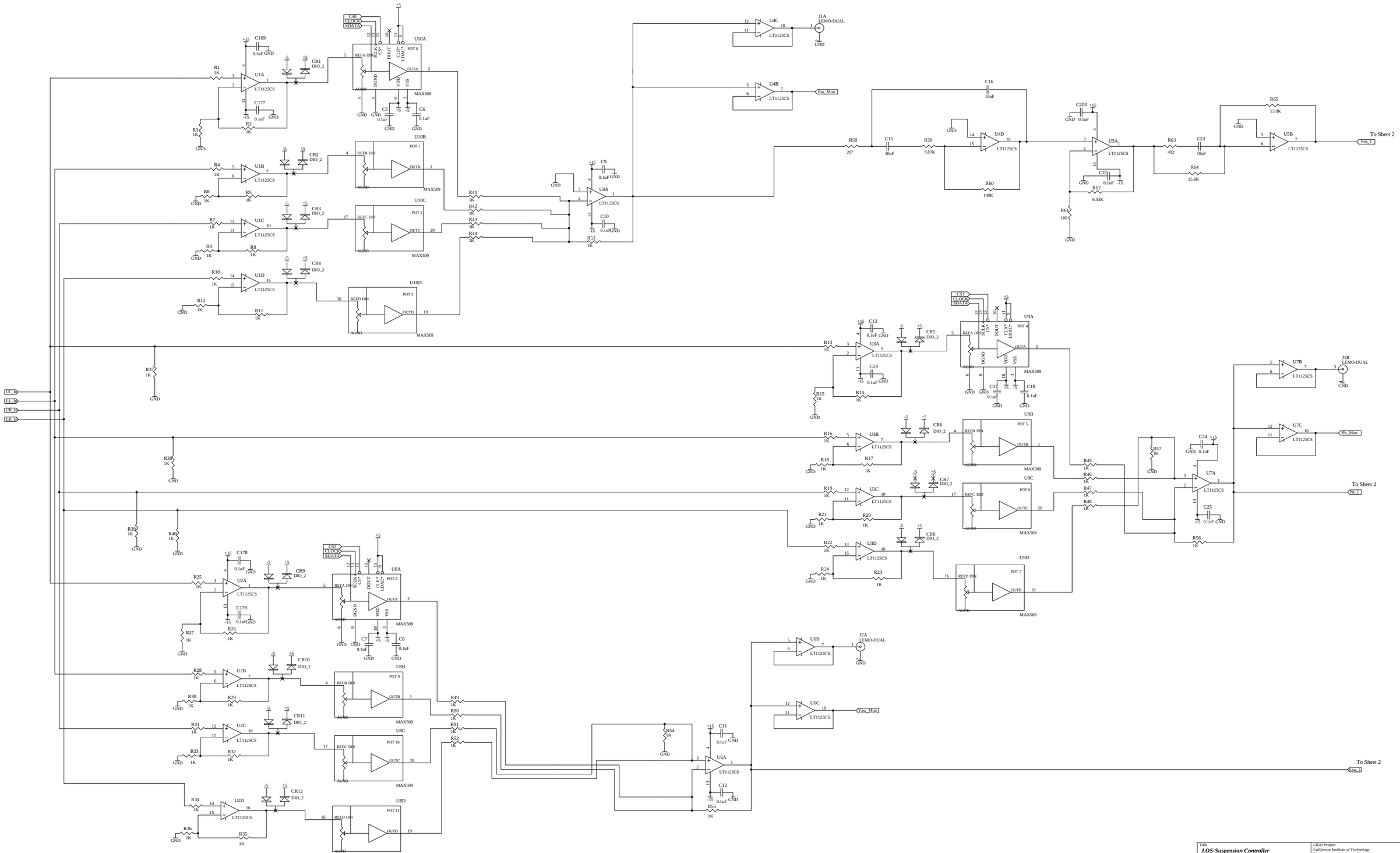

Title: **LOS-Suspension Controller**			LIGO Project California Institute of Technology Massachusetts Institute of Technology
Size: D	Number: D980013	Revision: 01	Engineer: R. Mohana
File: I:\CAD\LIGO\USERS\MOHANA\LIGO\Project\VB-Mon-100B.Sch	Date: 14:57:17	Sheet 2 of 9	LIGO

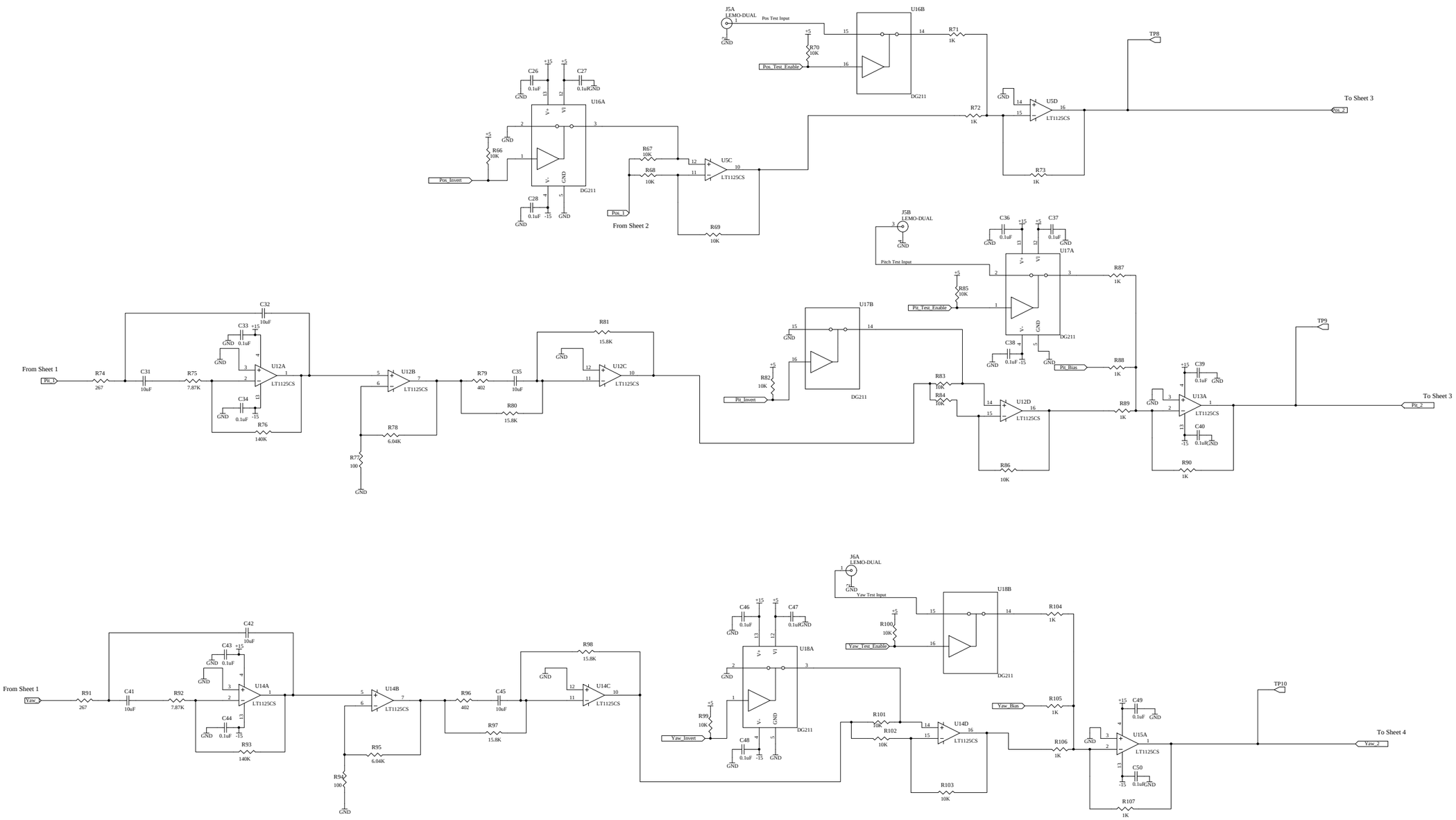

Title			
LOS-Suspension Controller			*LIGO Project* *California Institute of Technology* *Massachusetts Institute of Technology*
Size: D	Number: D980013	Revision: 01	Engineer: R. Mohana
File: I:\CAD\LIGO\USERS\MOHANA\D980013.DWG		Date: Wed, 13 Feb 2008	Time: 14:57:01 Sheet 3 of 9

LIGO

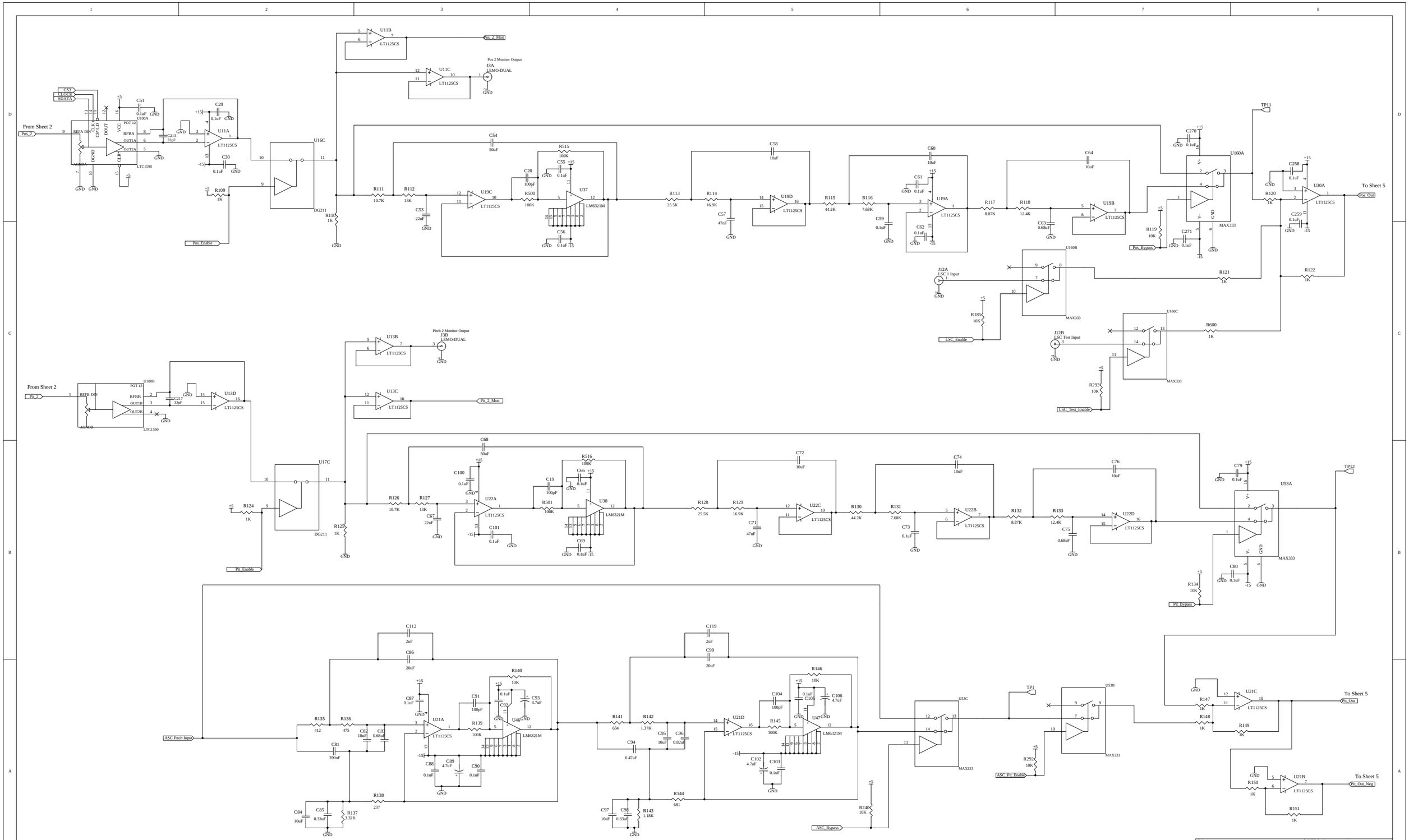

Title: **LOS-Suspension Controller**	LIGO Project California Institute of Technology Massachusetts Institute of Technology
Size: D · Number: D980013 · Revision: 01	Engineer: R. Mohana
File: I:\CAD\LIGO\USERS\MOHANA\	Date: 14:56:42 · Sheet 4 of 9

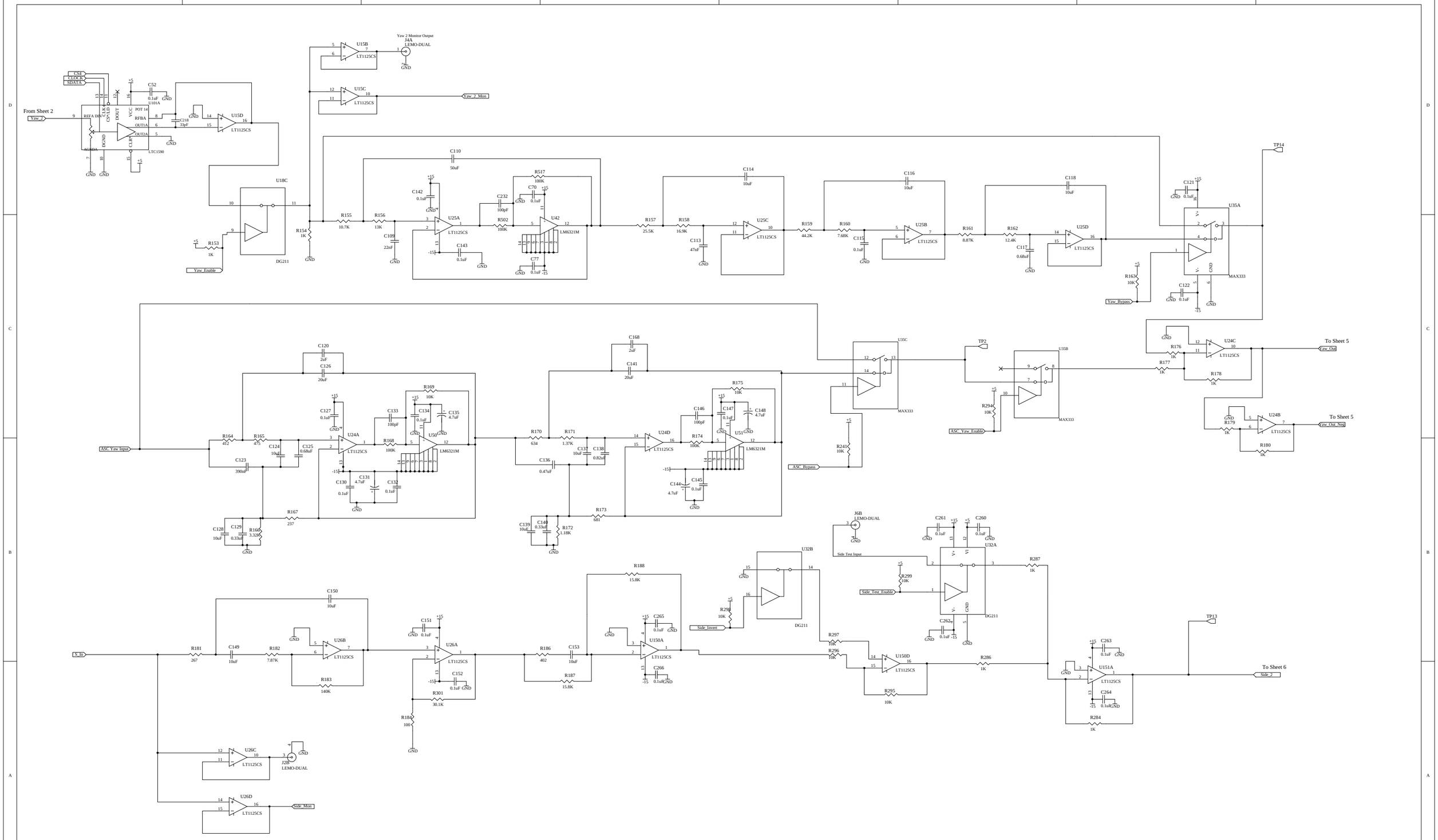

Title: **LOS-Suspension Controller**			LIGO Project California Institute of Technology Massachusetts Institute of Technology
Size: D	Number: D980013	Revision: 01	Engineer: R. Mohana
File: I:\CAD\LIGO\USERS\MOHANA\Digital\VB-Mon-3508.3\Site			Date: 14:56:22 Sheet 5 of 9

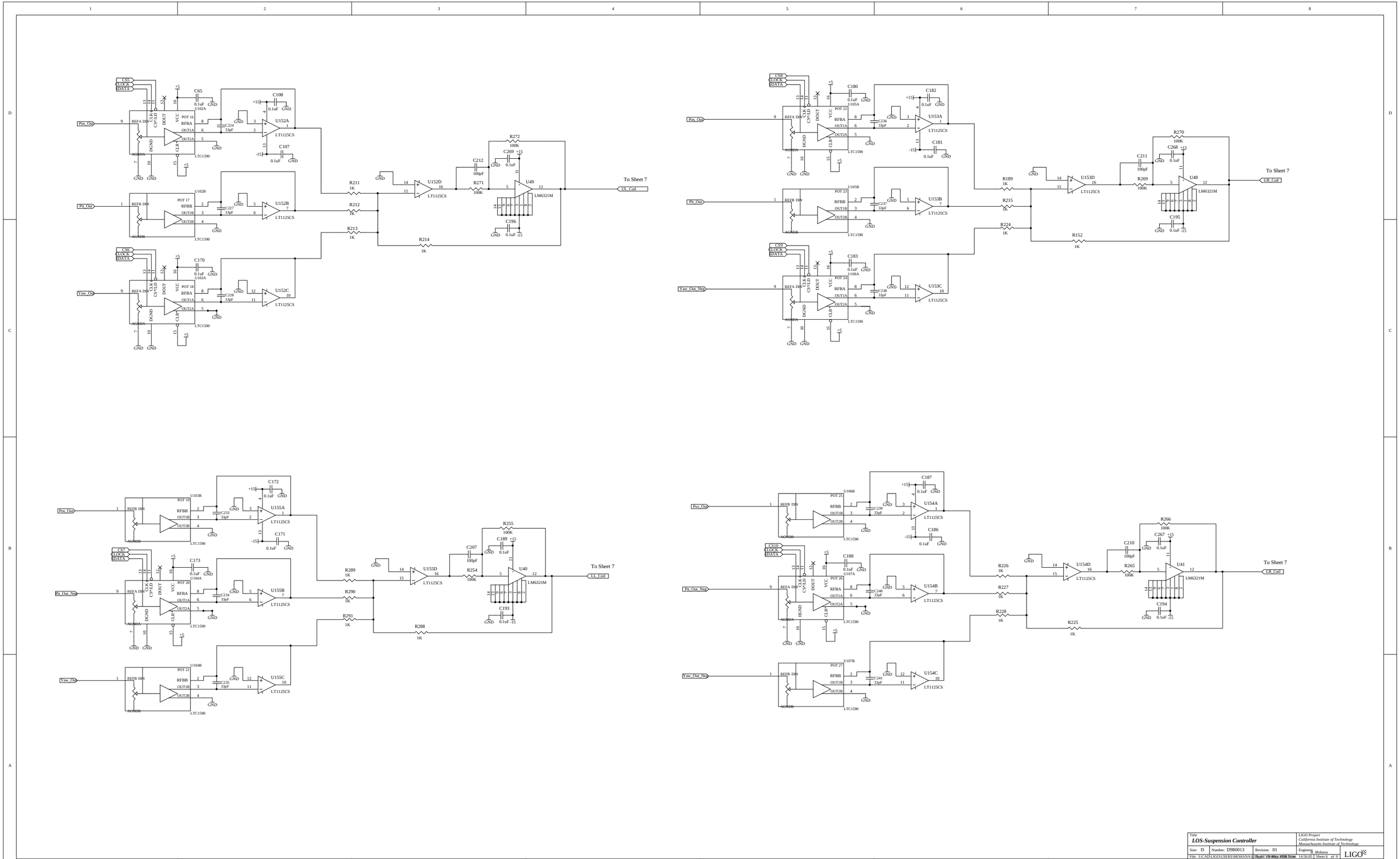

Title: **LOS-Suspension Controller**			*LIGO Project* *California Institute of Technology* *Massachusetts Institute of Technology*
Size: D	Number: D980013	Revision: 01	Engineer: R. Mohana
File: I:\CAD\LIGO\USERS\MOHANA\		Date: 15-Mar-1999 14:56:05	Sheet 6 of 9

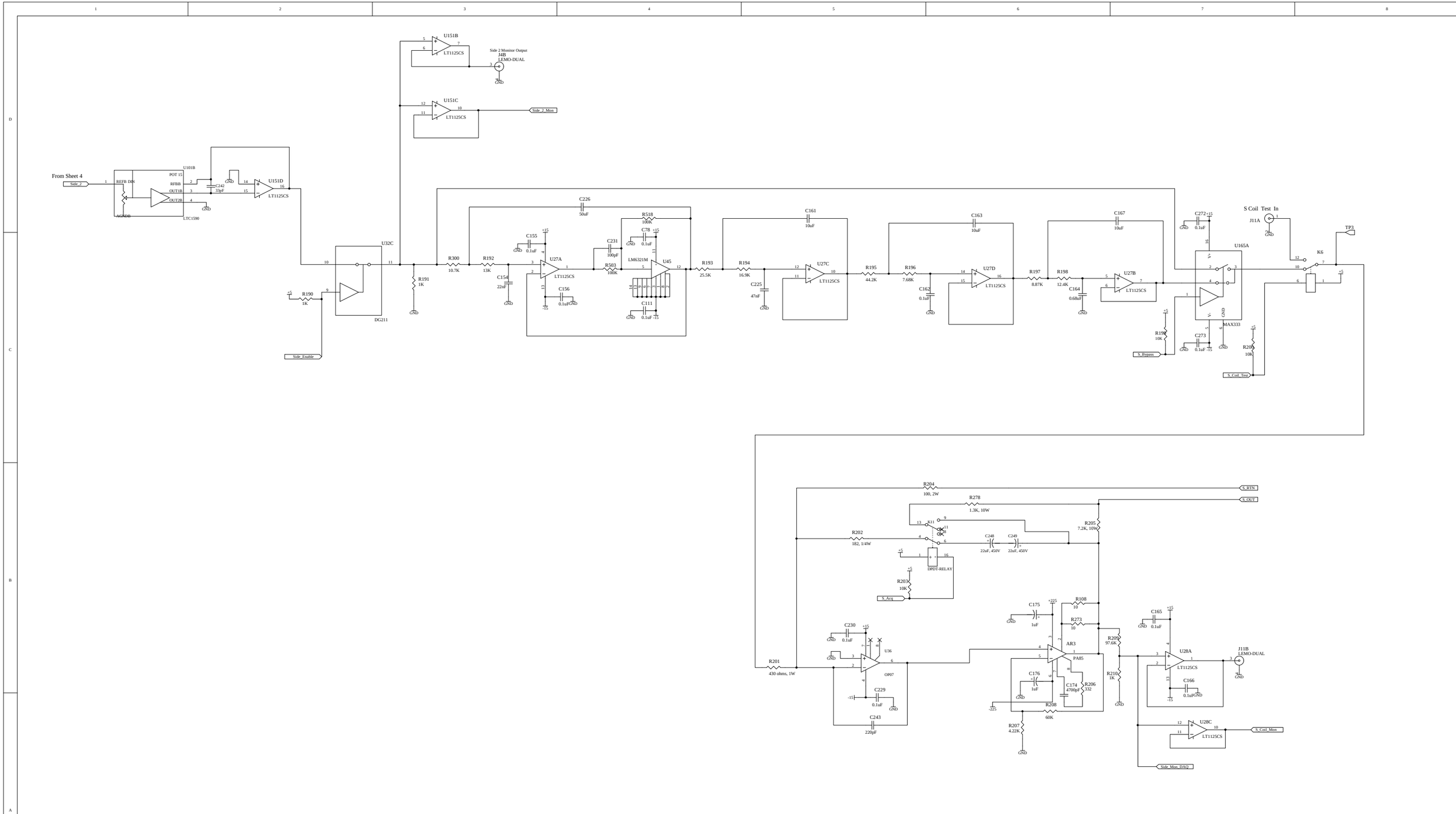

Title: **LOS- Suspension Controller**			LIGO Project California Institute of Technology Massachusetts Institute of Technology
Size: D	Number: D9800123	Revision: 01	Engineer: B. Mohana
File: I:\CAD\LIGO\USERS\MOHANA\	Date: 14:55:47	Sheet 7 of 9	LIGO

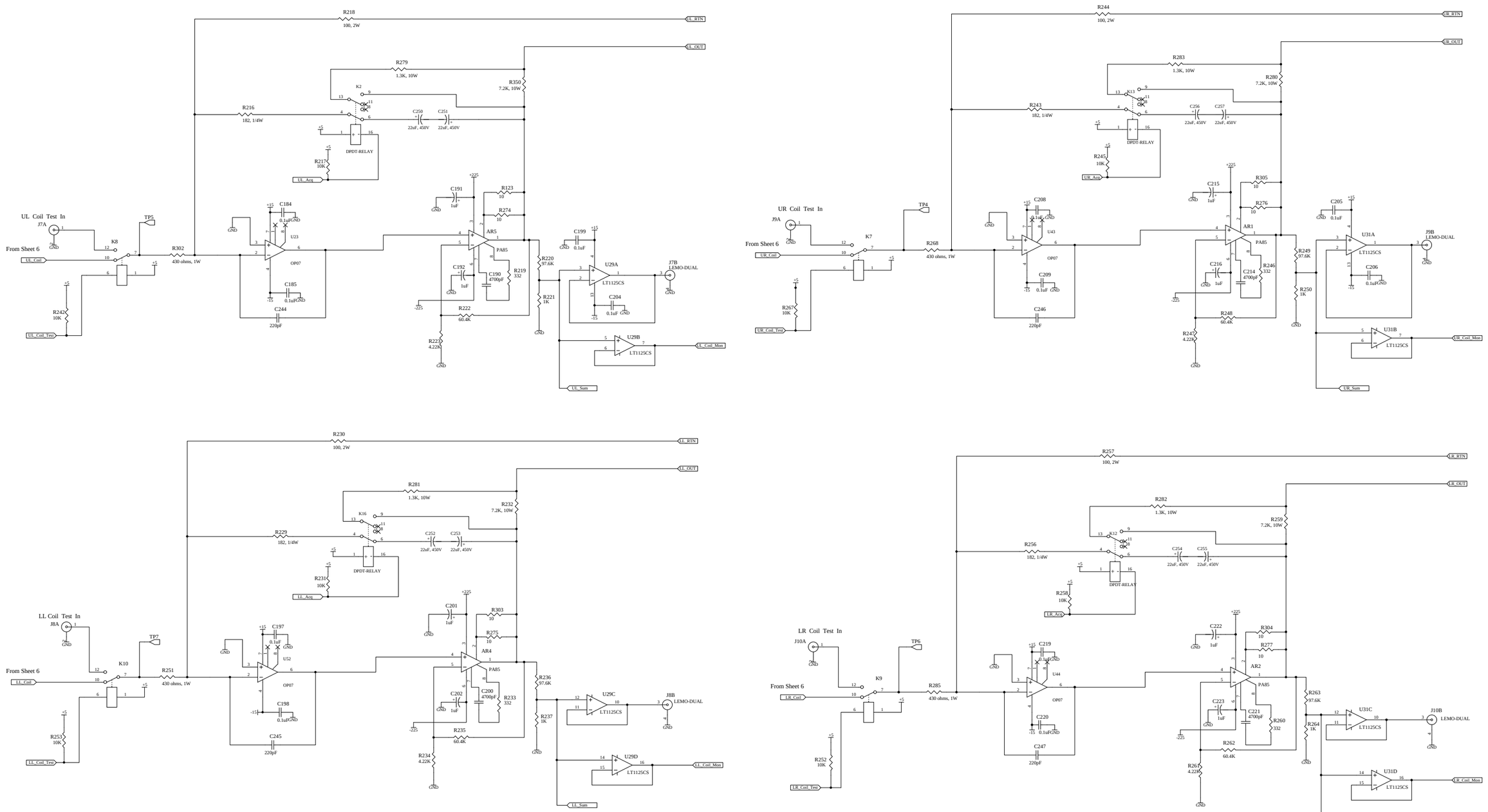

Title: **LOS- Suspension Controller**			LIGO Project, California Institute of Technology, Massachusetts Institute of Technology
Size: D	Number: D980013	Revision: 01	Engineer: B. Mohana
File: I:\CAD\LIGO\USERS\MOHANA\Los\LOS-Main.SCH.Sch		Date: Wed, Mar 17, 1999 14:55:22	Sheet 8 of 9

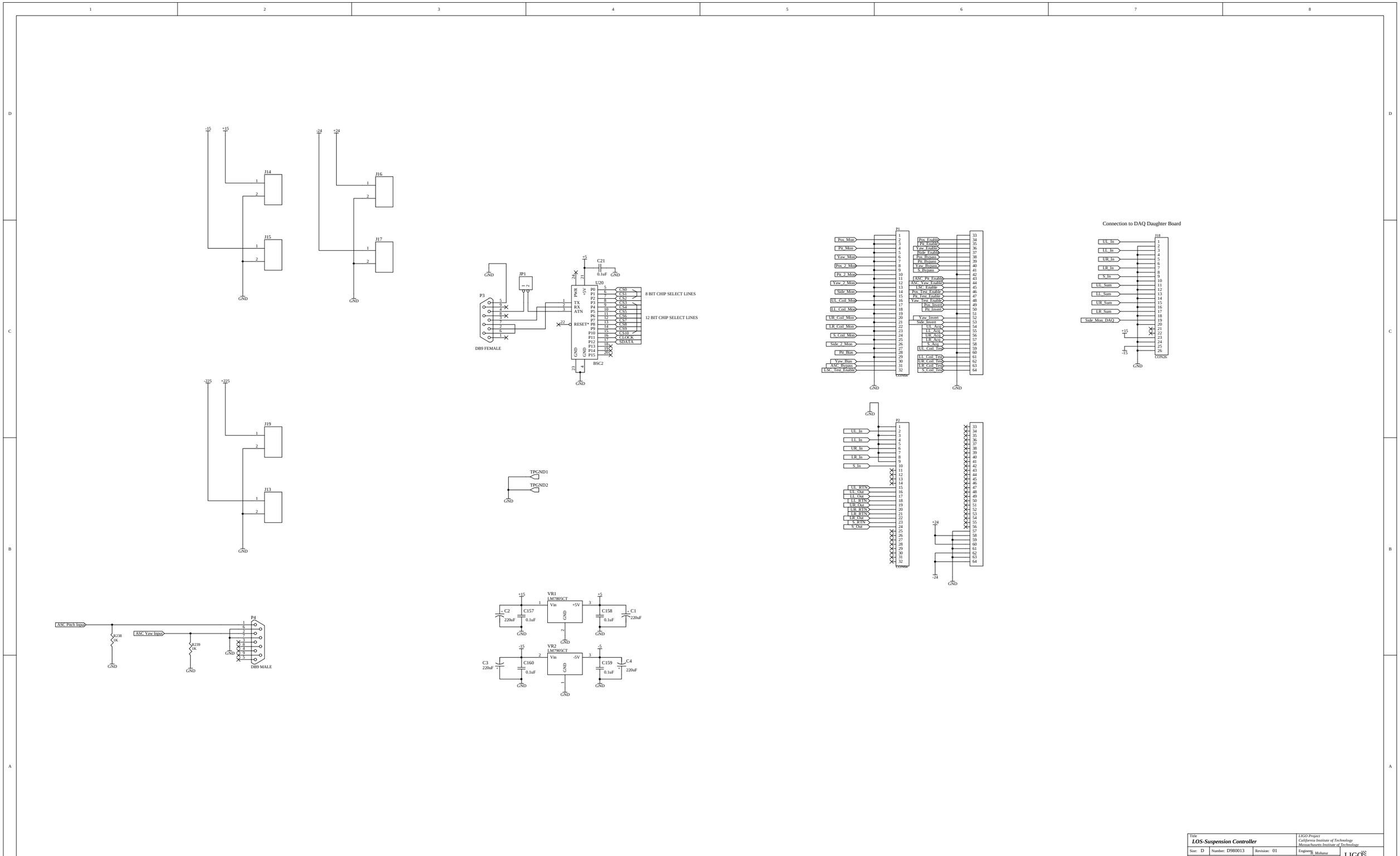

Title: **LOS-Suspension Controller**			LIGO Project California Institute of Technology Massachusetts Institute of Technology
Size: D	Number: D980013	Revision: 01	Engineer: R. Mohana
File: I:\CAD\LIGO\USERS\MOHANA\D	Date: 14-Mar-1998	Time: 14:58:00	Sheet 9 of 9

Title			LIGO Project California Institute of Technology Massachusetts Institute of Technology
LOS Controller			
Size: D	Number: D980013	Revision: 01	Engineer: R. Mohana
File: I:\CAD\LIGO\USERS\MOHANA\D980013.DWG		Date: 03-Mar-2000 Time: 14:57:35	Sheet 1 of 9

LIGO