NOTES: UNLESS OTHERWISE SPECIFIED
1. BREAK ALL SHARP EDGES
2. SPECIFICATIONS COVERING THE FABRICATION OF THIS CLAMP ARE IN THE LARGE OPTIC SUSPENSION (LOS) FIXTURES AND COMPONENTS FABRICATION SPECIFICATION, LIGO-E970155.

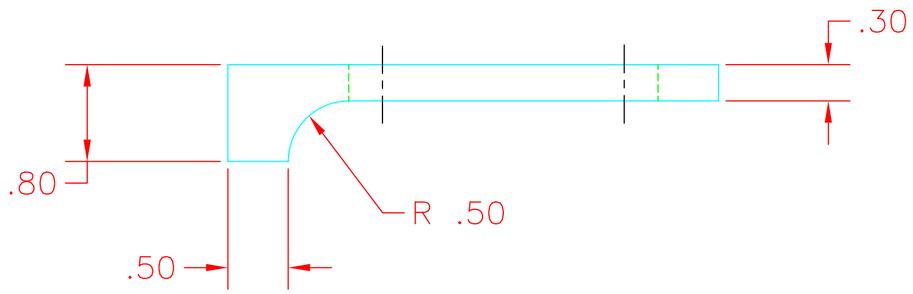

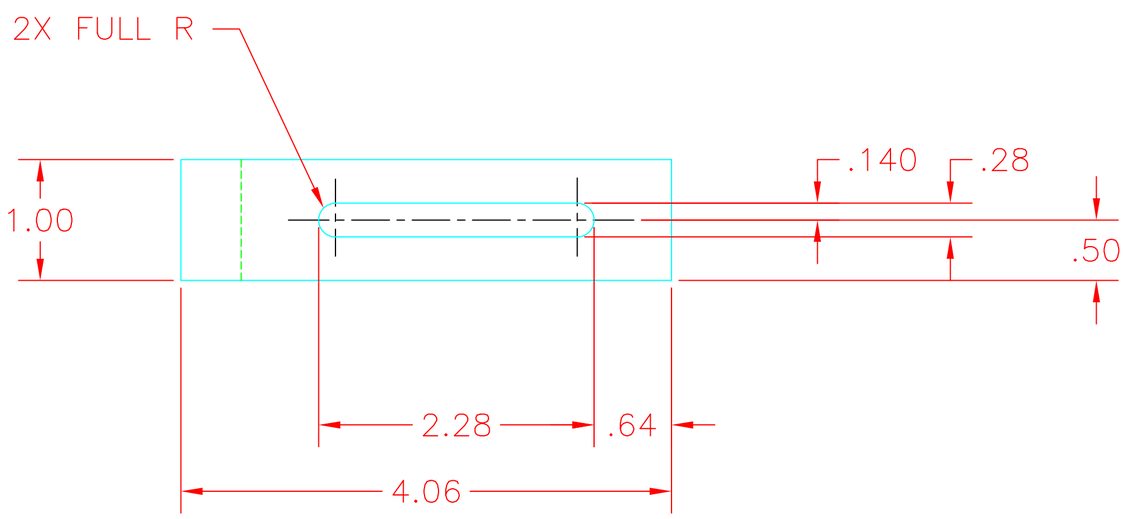

REF	QTY	PART or DRWG No.	CDS	MATERIAL

PARTS and MATERIAL LIST

DWG. NO.	DESCRIPTION
REFERENCE DRAWINGS	

UNLESS OTHERWISE SPECIFIED
DIMENSIONS ARE IN INCH
TOLERANCES:
FRACTIONAL ±
ANGULAR ±
TWO PLACE DECIMAL ± .015
THREE PLACE DECIMAL ± .005
FINISHED SURFACE RMS
BREAK CORNERS: .020
REMOVE ALL BURRS

MATERIAL: 303 OR 304 SST
HEAT TREAT:
FINISH:
USED ON:
NEXT ASS'Y:

REV	DESCRIPTION	DCN NUMBER	CHECK	DRWN	DATE
B	ADD NOTES	E980219	-	KABOT	8-11-98
A	INITIAL RELEASE	E980084	-	KABOT	4-22-98
00	PRE-RELEASE	-	-	CDI-AS	03/09/98

ISSUE DESCRIPTION

LIGO
CALIFORNIA INSTITUTE OF TECHNOLOGY
MASSACHUSETTS INSTITUTE OF TECHNOLOGY

LOS CLAMP, SHORT

CAD FILE	SIZE	DWG. NO.
980183-B.DWG	C	D980183-B

SCALE 1:1
SHEET 1 OF 1