NOTES: (UNLESS OTHERWISE SPECIFIED)

1. X

2. X

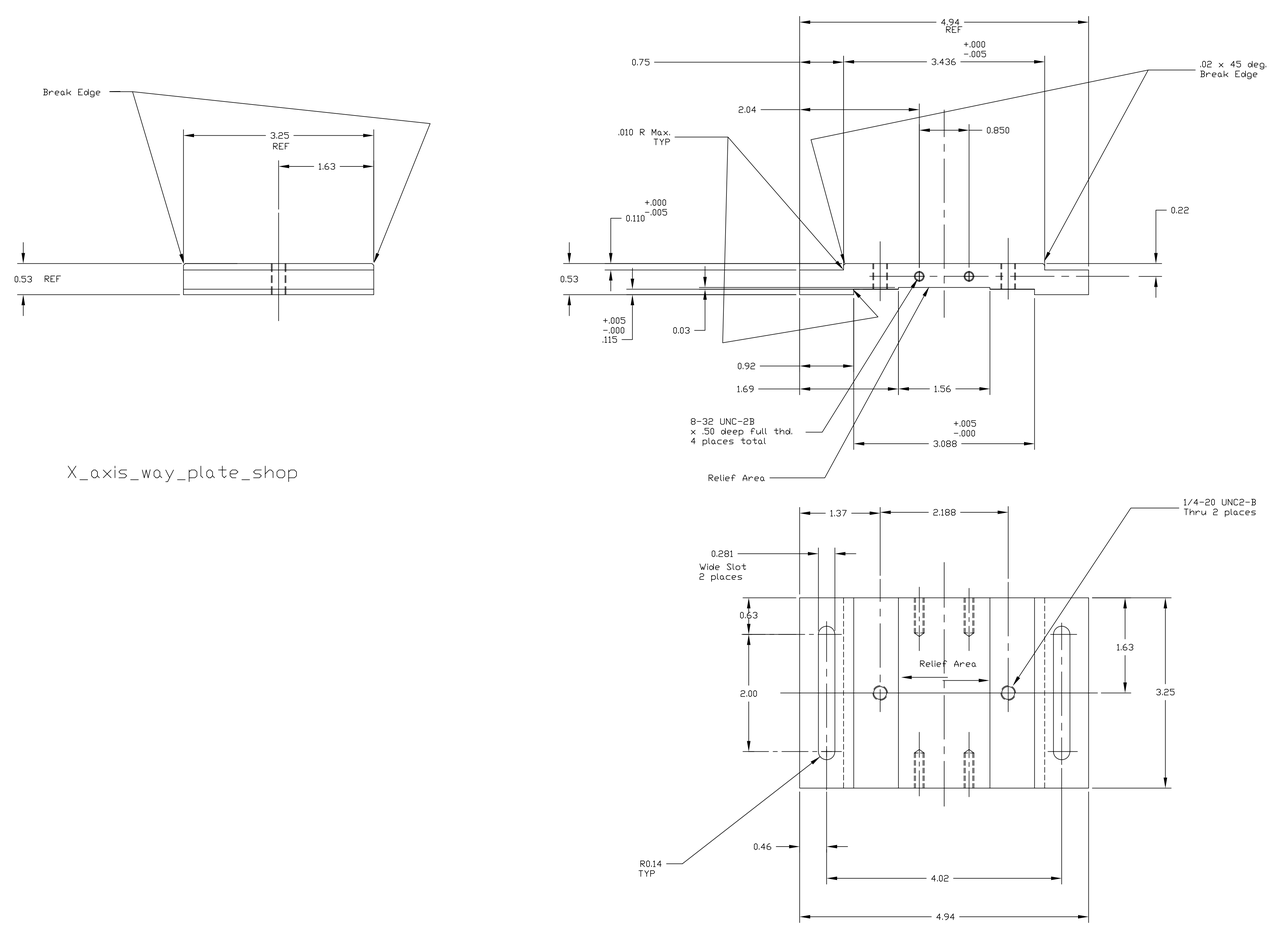

X_axis_way_plate_shop

PROTOTYPE

REF	QTY	PART or DRWG No.	DESCRIPTION	MATERIAL
5	-	-	-	-
4	-	-	-	-
3	-	-	-	-
2	-	-	-	-
1	-	-	-	-

PARTS and MATERIAL LIST

DWG. ND.	DESCRIPTION
XXX	XXX

REFERENCE DRAWINGS

UNLESS OTHERWISE SPECIFIED
DIMENSIONS ARE IN INCHES

TOLERANCES:
FRACTIONAL ± 1/32
TWO PLACE DECIMAL ± .01
THREE PLACE DECIMAL ± .005
ANGULAR ± 1 deg.

~~ANGULARMACH ± BEND ±~~
FINISHED SURFACE RMS 63
BREAK CORNERS and EDGES
REMOVE ALL BURRS

MATERIAL:	HEAT TREAT:	FINISH:
Alum 6061 T-6	TBD	None

USED ON: XXX | NEXT ASS'Y: XXX

REV	DESCRIPTION	DCN NUMBER		APPR'D	CHECK	DRWN	DATE
00	PRE-RELEASE	-	-	-	-	mailand	6-24-98

ISSUE DESCRIPTION

LIGO CALIFORNIA INSTITUTE OF TECHNOLOGY
MASSACHUSETTS INSTITUTE OF TECHNOLOGY

TITLE
X-Axis Way Pl.

CAD FILE: file: Secondary_Mirror_Mount_DKP_3.dwg
SIZE: D
DWG. ND.: D980317-00-D
SCALE: FULL
SHEET