NOTES: (UNLESS OTHERWISE SPECIFIED)

1. STAMP OR ENGRAVE SERIAL NUMBER ON PART PER LIGO L970196.
2. ALL MACHINING FLUIDS SHALL BE WATER SOLUBLE AND FREE OF SULFUR, CHLORINE, AND SILICONE.

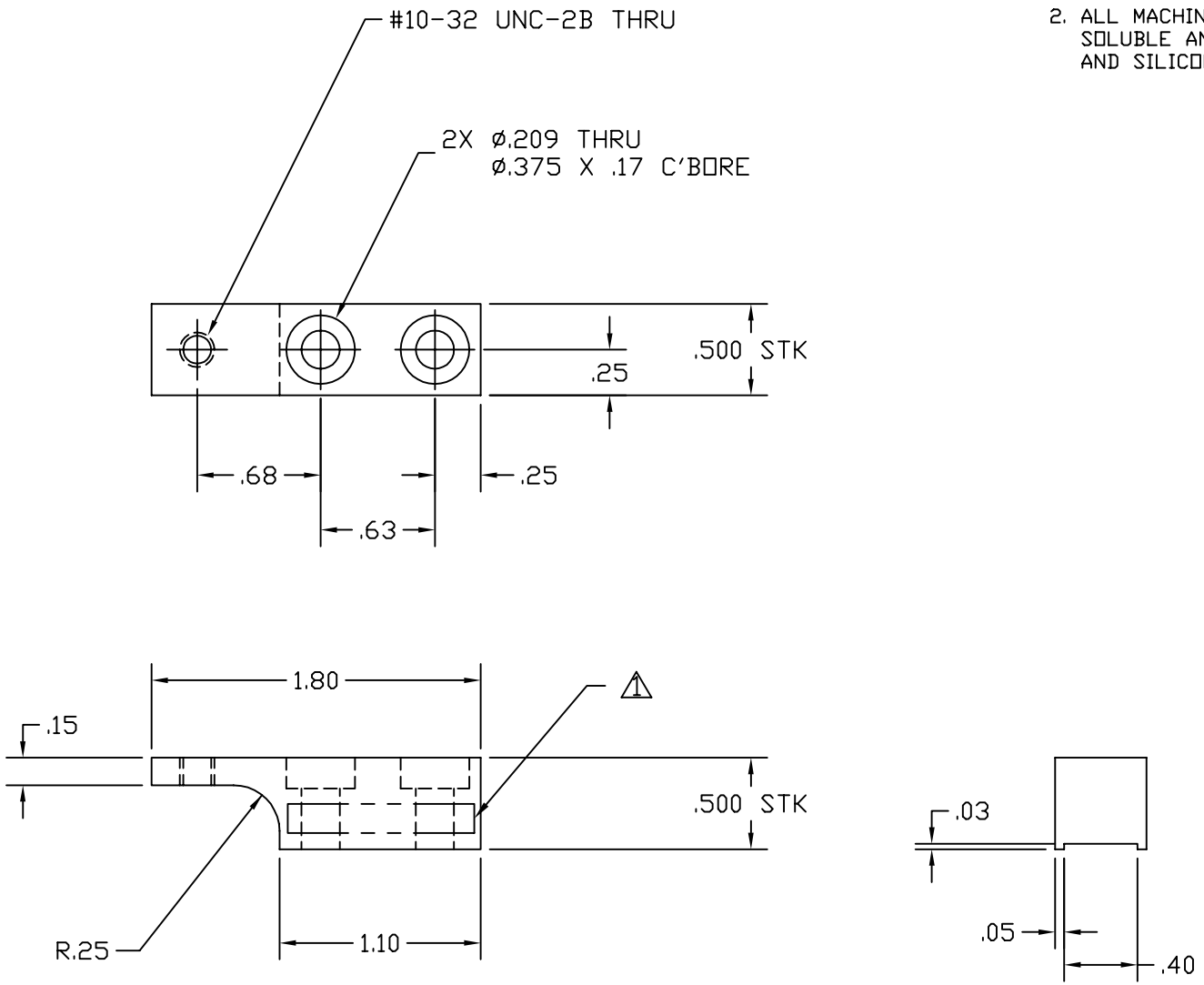

UNLESS OTHERWISE SPECIFIED
DIMENSIONS ARE IN INCHES

TOLERANCES:
FRACTIONAL ±
ANGULAR ± 0.5°
ANGULARMACH ± BEND ±
TWO PLACE DECIMAL ± .01

THREE PLACE DECIMAL ± .005
FINISHED SURFACE 32 microinch average
BREAK CORNERS IN: OUT: .005-.010
REMOVE ALL BURRS

MATERIAL: 6061-T6 ALUMINUM .500 SQ BAR

HEAT TREAT:

FINISH:

USED ON:

NEXT ASS'Y: D990002

REV	DESCRIPTION	CHECK	DATE	DRWN	DATE
A	DCN E990107			C. Conley	3-24-99

ISSUE DESCRIPTION

LIGO CALIFORNIA INSTITUTE OF TECHNOLOGY MASSACHUSETTS INSTITUTE OF TECHNOLOGY

ELIPTICAL BAFFLE LOCATING TAB

CAD FILE: D990012-A.dwg

SIZE: A

DWG. NO.: D990012-A

SCALE: NTS

SHEET: 1 OF 1