Nominal Whitening is 2ea. 4 Hz zeros and 2ea. 40 Hz poles, Gain 2 @ DC, plus 2 poles @ 800Hz, plus 2 ea. 2 pole 800Hz Butterworth LPF

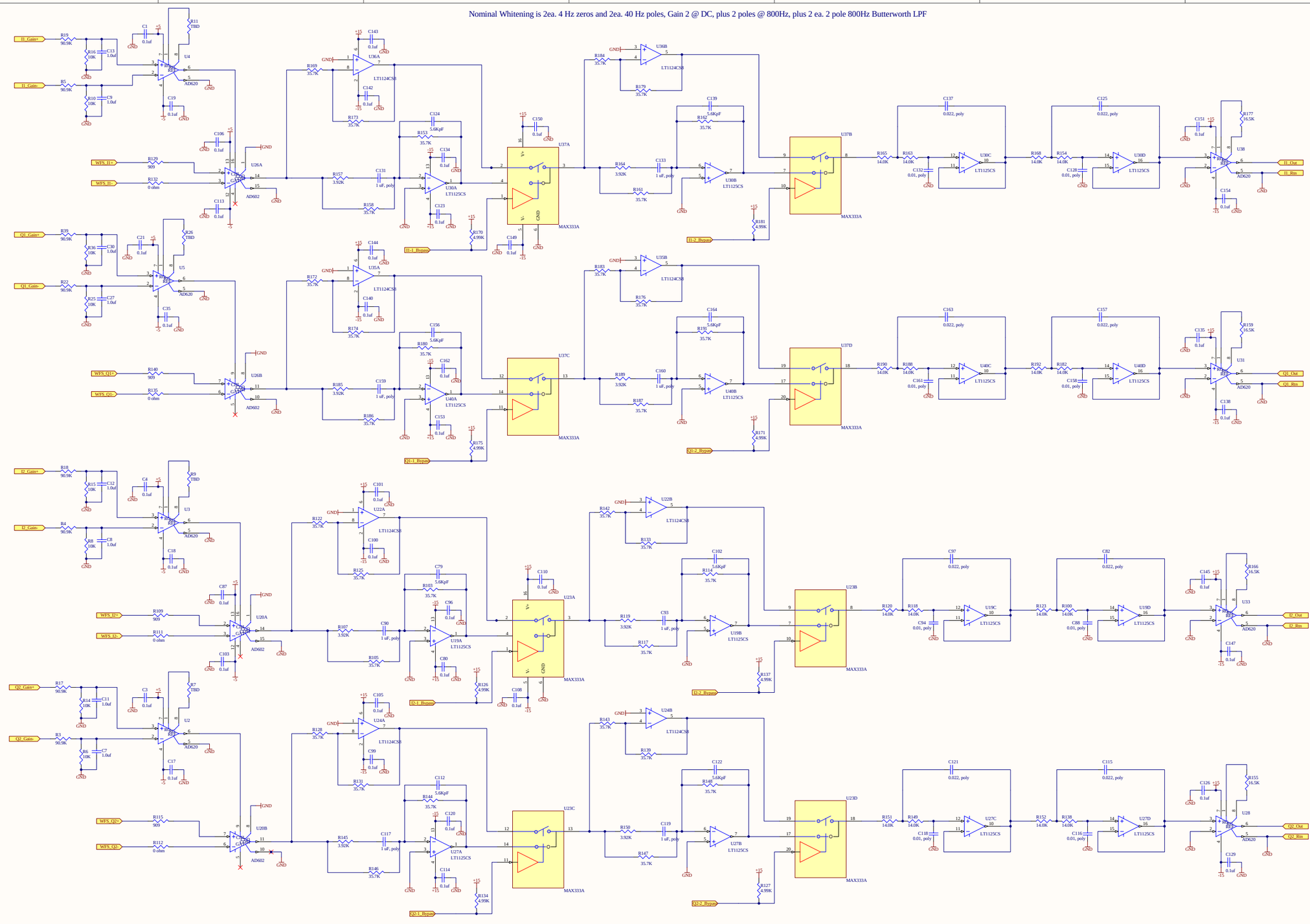

Title: *WFS Whitening and Interface Board*		LIGO Laboratory, California Institute of Technology, Massachusetts Institute of Technology	LIGO
Size: D	DCC Number: D990196	SCH / PCB Revision: C/B	Engineer: *J. Heefner*
Date: 6/20/2005	Time: 11:30:39 AM	Sheet 1 of 3	
File: C:\Rich's Files\Mycadfiles\WFS_white_c\wfs_wht_intRevC1.sch			

Nominal Whitening is 2ea. 4 Hz zeros and 2ea. 40 Hz poles, Gain 2 @ DC, plus 2 poles @ 800Hz, plus 2ea. 2 pole 800Hz Butterworth LPF

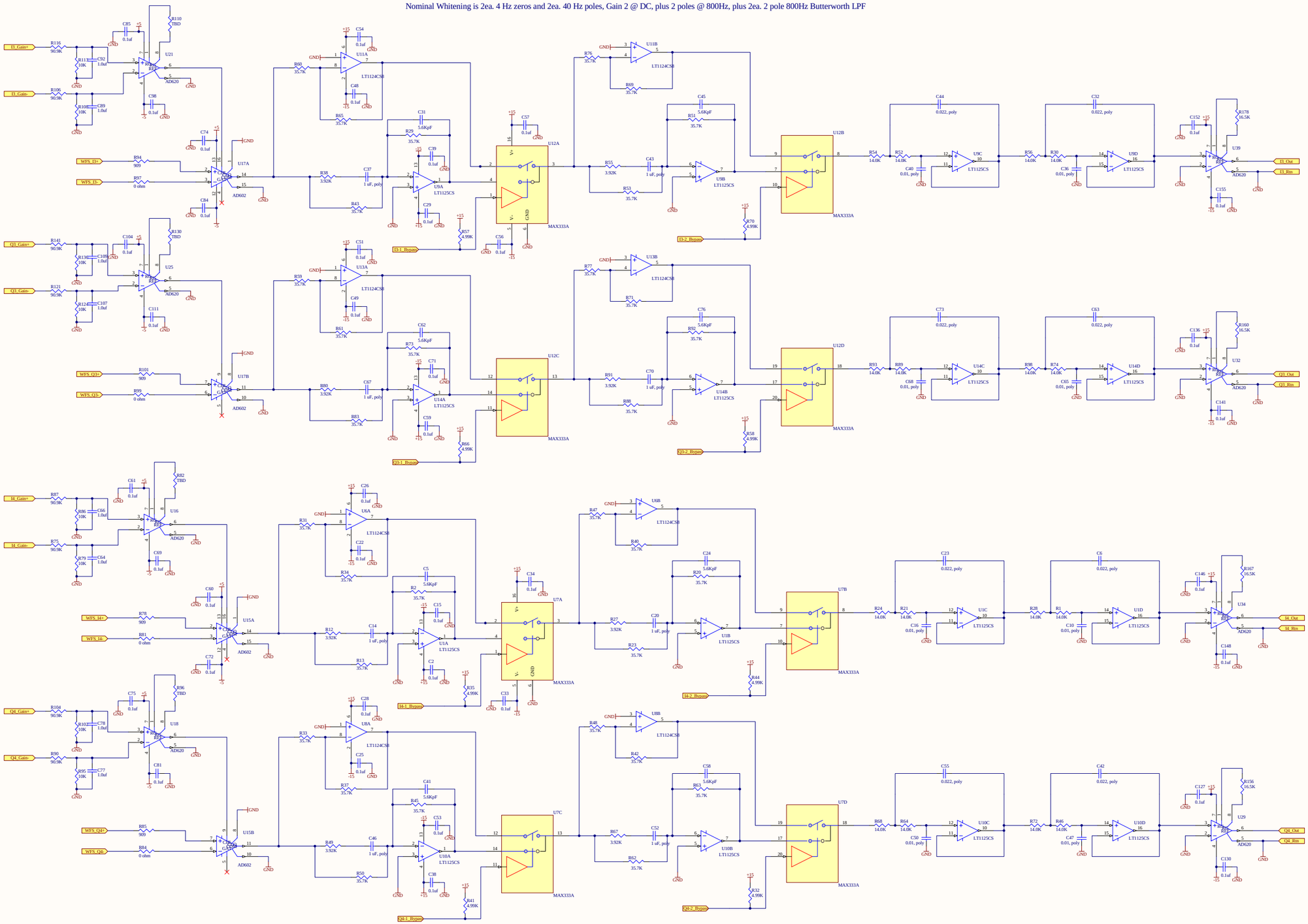

Title: *WFS Whitening and Interface Board*		*LIGO Laboratory* *California Institute of Technology* *Massachusetts Institute of Technology*	LIGO
Size: D	DCC Number: D990196	SCH / PCB Revision: C/B	Engineer: *J. Heefner*
Date: 6/20/2005	Time: 11:37:10 AM	Sheet 2 of 3	

File: C:\Rick\s Files\Mycadfiles\WFS_white_c\wfs_wht_intRevC2.sch

Revision	Description	Date
A	Initial Release	5/99
B	1. Added LT1124 op amps in bypass paths to keep signal polarity constant regardless of mode. 2. Added AD620 diff amps to present a true difference input to the gain adjust inputs.	1/00
C	DCN E050130 makes the following changes: 1. Grounded reference pins on AD-620s used as output drivers (pin5) 2. Changed gain of AD-620 outputs from 2 to 4 by changing the gain resistor from 49.9K to 16.5K	5/05

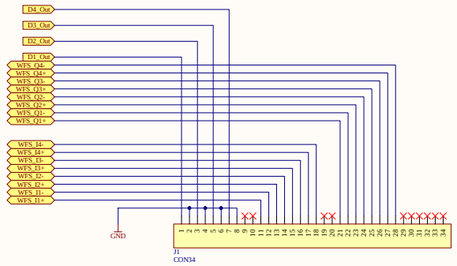

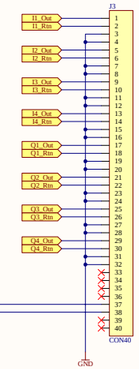

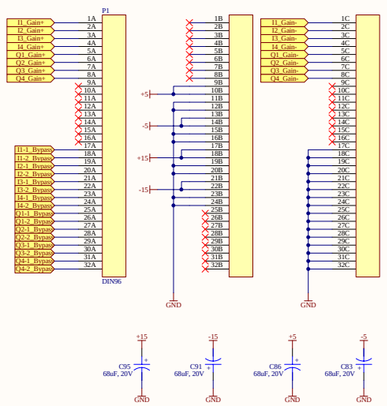

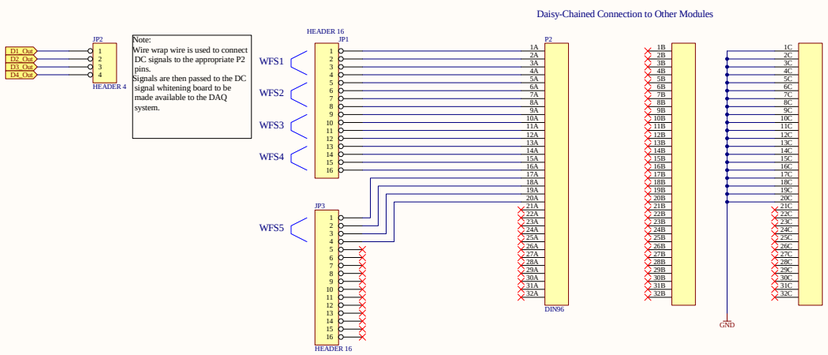

Title	WFS Whitening and Interface Board	LIGO Laboratory California Institute of Technology Massachusetts Institute of Technology	LIGO
Size: D	DCC Number: D990196	SCH / PCB Revision: C/B	Engineer: J. Heefner
Date: 6/20/2005	Time: 11:37:55 AM	Sheet 1 of 1	

File: C:\Rich's Files\Mycadfiles\WFS_white_c\wfs_whit_intRevC3.sch