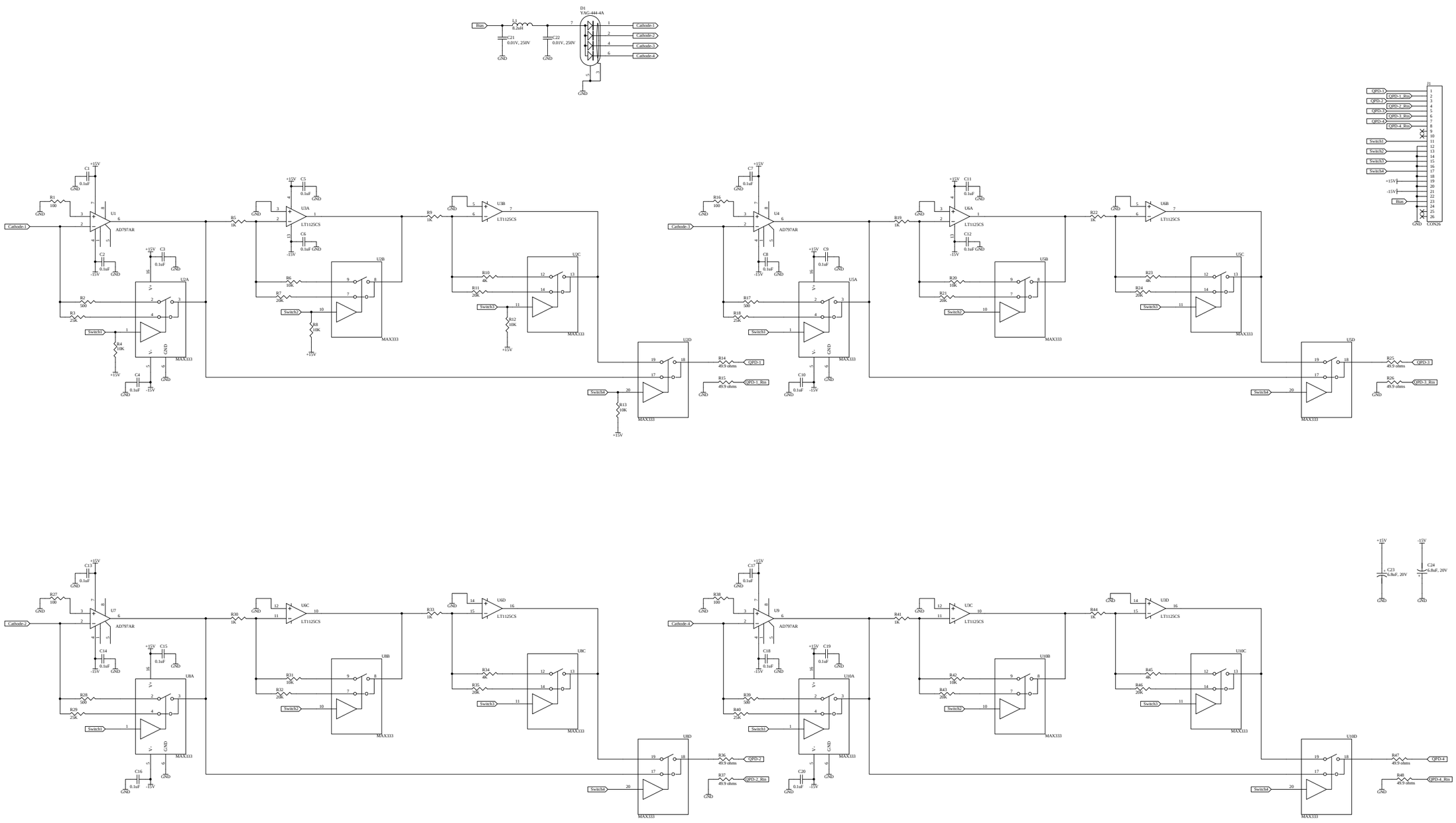

Title: **ASC- Quad Photo Diode Amplifier**			LIGO Laboratory, California Institute of Technology, Massachusetts Institute of Technology	LIGO
Size: D	DCC Number: D990272	SCH / PCB Revision: A	Engineer: M. Mohana	Date: 13-Oct-1999
				Time: 08:23:56
File: K:\lircad\ligerunners\jay\QuadPD\QuadPD.sch				Sheet 1 of 1