NOTES: (UNLESS OTHERWISE SPECIFIED)

1. STEEL STAMP OR ENGRAVE THE DRAWING PART NUMBER ON NOTED FACE OF PART FOLLOWED BY "S/N", THEN A THREE DIGIT SERIAL NUMBER. SERIAL NUMBERS TO START AT 001 FOR FIRST PART AND PROCEED IN A CONSECUTIVE MANNER TO A MAXIMUM OF 999, FOR EACH SUCCEEDING PART PRODUCED. USE 0.13 HIGH CHARACTERS.
   EXAMPLE: D990038-A S/N 001

2. THIS IS A UHV APPLICATION AND ALL STOCK METAL SURFACES ARE TO BE CLEANED. NO MILL IDENT. MARKS OR FORMING DISCOLORATION IS PERMISSIBLE ON FINISHED PART. SCOTCH-BRITE, JITTERBUG, SKIN CUT, TUMBLING, OR CAUSTIC ETCH AND "DI" RINSE ARE ACCEPTABLE METHODS OF CLEANING. IN ADDITION, ELECTROPOLISH IS ACCEPTABLE FOR STAINLESS STEEL.

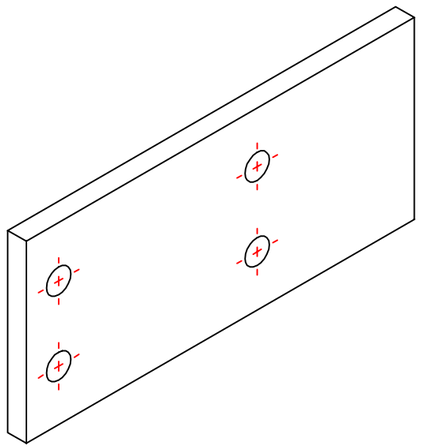

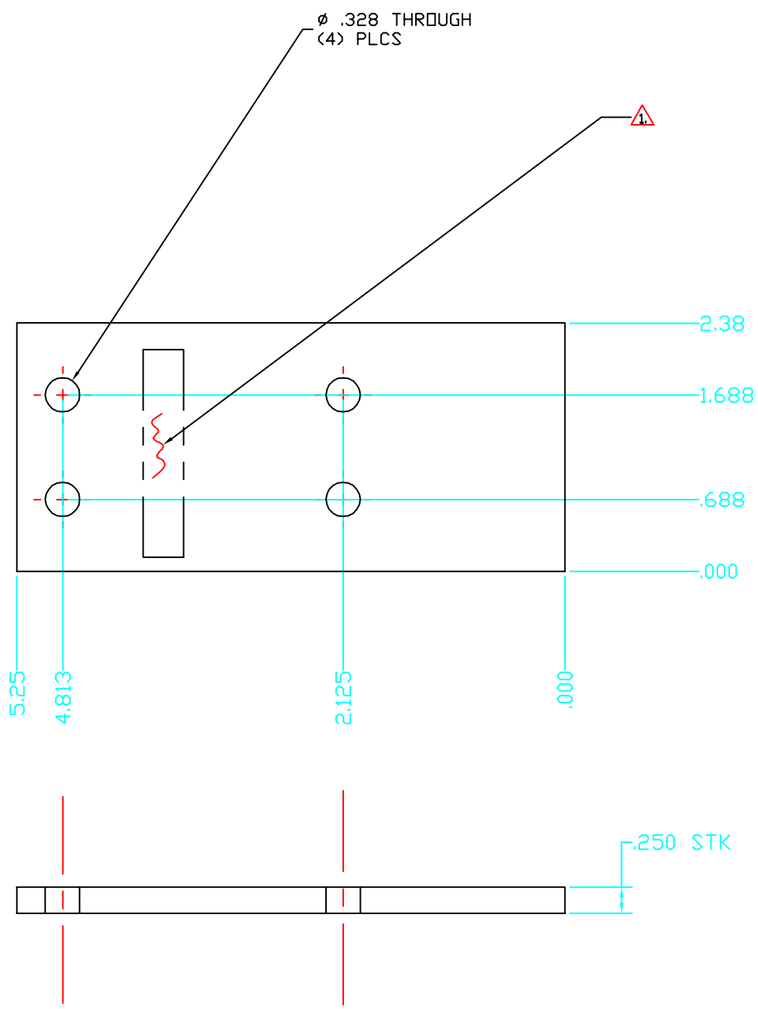

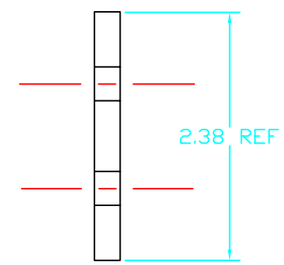

UNLESS OTHERWISE SPECIFIED
DIMENSIONS ARE IN INCHES (MM)

TOLERANCES:
FRACTIONAL ± 1/64
ANGULAR ± 1/2°
TWO PLACE DECIMAL ±.01
THREE PLACE DECIMAL ±.003

INSIDE RADII .06
FINISHED SURFACE RMS
BREAK OUTSIDE CORNERS .005 - .015
REMOVE ALL BURRS

MATERIAL: 300 SERIES STAINLESS STEEL BAR 1/4 x 2 1/2
HEAT TREAT:
FINISH: 1. 2.

DWG. NO.	DESCRIPTION
REFERENCE DRAWINGS	

USED ON:
NEXT ASS'Y: D990341, D990350

REV	DESCRIPTION	DCN NUMBER		APPR'D	CHECK	DRWN	DATE
A	RELEASE	E990232	-			KABOT	7-12-99

ISSUE DESCRIPTION

LIGO CALIFORNIA INSTITUTE OF TECHNOLOGY
MASSACHUSETTS INSTITUTE OF TECHNOLOGY

ARM CAVITY BAFFLE,
GLASS SUPPORT,
CONNECTOR PLATE

CAD FILE: ATT_PLT7.dwg
SIZE: B
DWG. NO.: D990379-A
SCALE: NTS
SHEET: 1 OF 1