NOTES: (UNLESS OTHERWISE SPECIFIED)

1. ALL ABRASIVE CUTTING TO BE DONE FROM NEAR SIDE.
2. GLASS TO BE COVERED BY VINYL MASK ON BOTH SIDES PRIOR TO START OF MACHINING, AND REMOVED BEFORE SHIPMENT.
3. MAKE FROM: #12 WELDERS FILTER GLASS (SCHOTT) 0.12" THICK.
4. ETCH OR ENGRAVE THE DRAWING PART NUMBER ON NOTED FACE OF PART FOLLOWED BY "S/N", THEN A THREE DIGIT SERIAL NUMBER. SERIAL NUMBERS TO START AT 001 FOR FIRST PART A MAXIMUM OF 999, FOR EACH SUCCEEDING PART PRODUCED. USE 0.13 HIGH CHARACTERS.
   EXAMPLE: D990038-A S/N 001

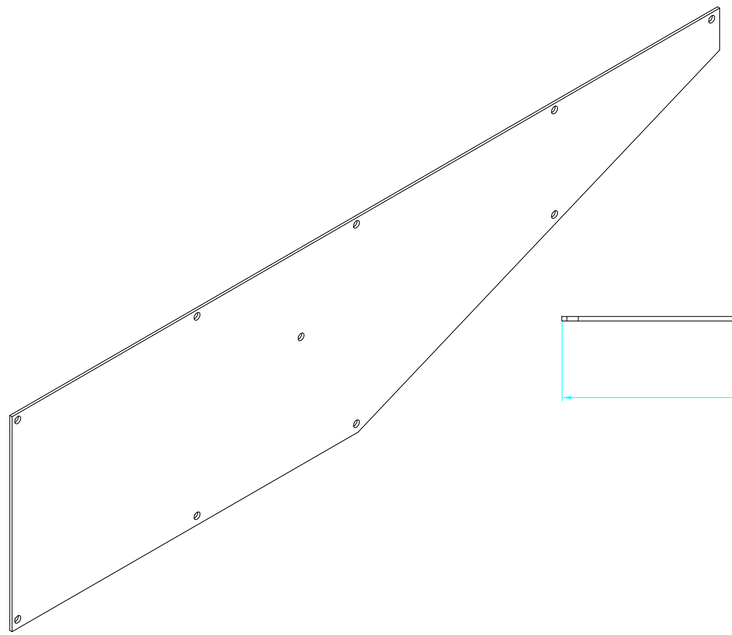

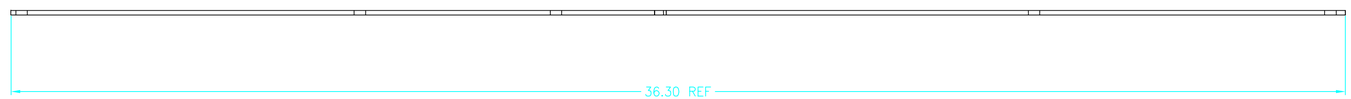

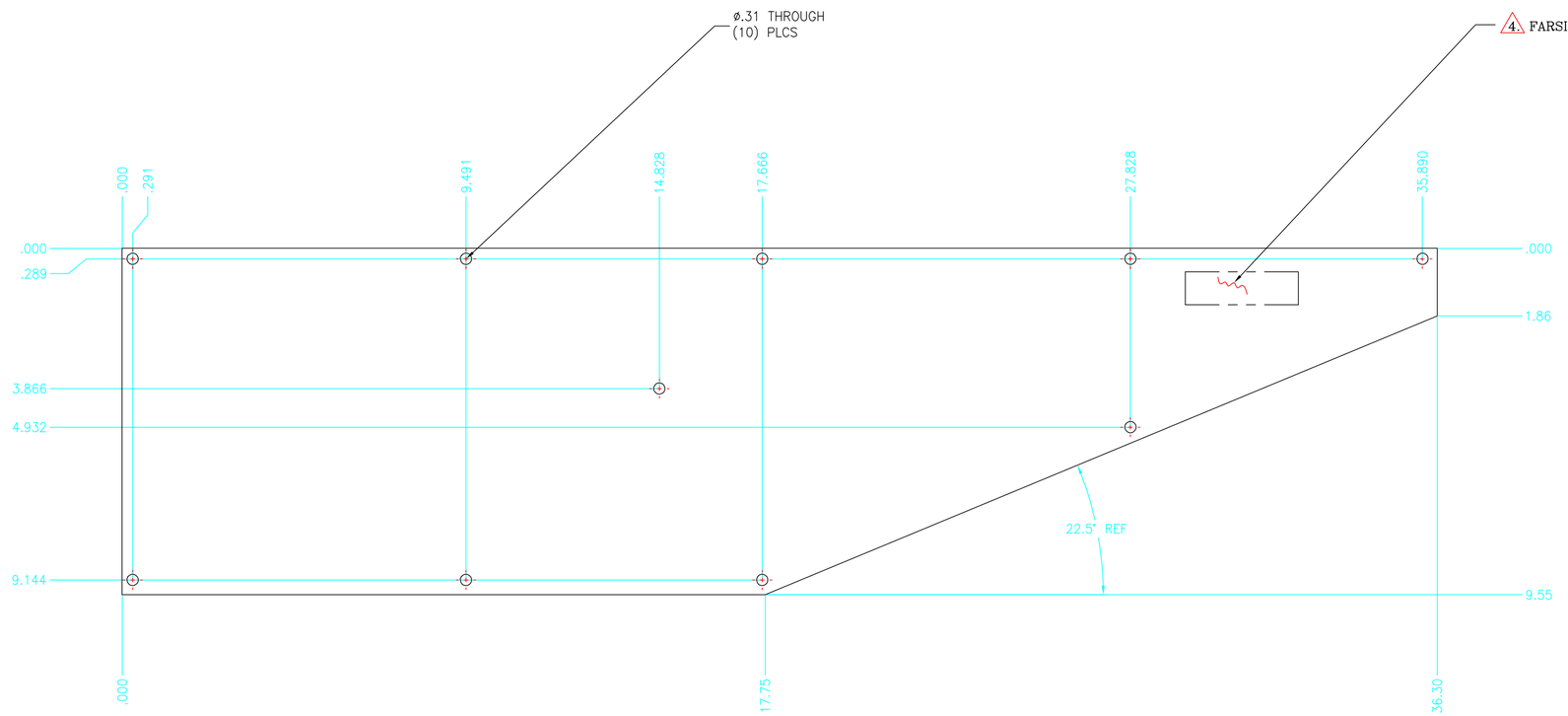

DWG. NO.	DESCRIPTION
REFERENCE DRAWINGS	

UNLESS OTHERWISE SPECIFIED
DIMENSIONS ARE IN INCHES

TOLERANCES:
FRACTIONAL ± 1/64
ANGULAR ± 1/2°
TWO PLACE DECIMAL ±.01
THREE PLACE DECIMAL ±.005

INSIDE RADII
FINISHED SURFACE RMS
BREAK OUTSIDE CORNERS .002 – .010
REMOVE ALL BURRS

MATERIAL: 3.
HEAT TREAT:
FINISH: 1. 2. 4.

USED ON:
NEXT ASS'Y: D980174, D980175, D980176

REV	DESCRIPTION	DCN NUMBER		APPR'D	CHECK	DRWN	DATE
A	RELEASE	E990389	–	–	–	KABOT	1-12-00

ISSUE DESCRIPTION

LIGO CALIFORNIA INSTITUTE OF TECHNOLOGY
MASSACHUSETTS INSTITUTE OF TECHNOLOGY

ARM CAVITY BAFFLE,
GLASS 5E

CAD FILE	SIZE	DWG. NO.
D990389-A.dwg	D	D990389-A
SCALE NTS		SHEET 1 OF 1