Monolithic Flexure Design
for the Arm Cavity Baffle (ACB) and the Cryo-pump/Manifold Baffle (CMB)

	tensile			
Material	**yield (Pa)**	**yield (psi)**	**Ultimate (Pa)**	**Ultimate (psi)**
ASTM A228 music wire (2 mm dia.)	1.95E+09	2.83E+05		
316 annealed bar	2.40E+08	3.48E+04	5.50E+08	7.98E+04
Sandvik SAMMAC 304/304L bar	2.05E+08	2.97E+04	5.15E+08	7.47E+04

The effect of the flexure's elastic restoring force on the pendulum frequency was calculated using ANSYS11 Workbench (modal with prestress and confirmed with dynamic analysis with gravitational acceleration).
The "elastic frequency" given below is the frequency without a graqvitational restoring force. The "pendulum" frequency includes the effect of gravity and the elastic stiffness of the flexure.

	flexure										
Flexure Design	**diameter (in)**	**length (in)**	**material**	**Mass (lb)**	**fillet radius (in)**	**Nominal Stress (Pa)**	**Peak Stress (Pa)**	**Factor of Safety over yield**	**Elastic Freq. (Hz)**	**Pendulum Freq. (Hz)**	**comments**
clamped wire design	0.075	0.547	music wire	72.4	0.05	1.13E+08	1.30E+08	14.95	0.077	0.482	more difficult to assemble possible slippage at clamp
ACB monolithic flexure	0.075	0.547	316 annealed bar	72.4	0.05	1.13E+08	1.30E+08	1.84	0.077	0.482	FS too low
ACB monolithic flexure	0.100	0.547	316 annealed bar	72.4	0.05	6.35E+07	7.52E+07	3.19	0.130	0.495	
ACB monolithic flexure	0.100	0.547	316 annealed bar	72.4	0.10	6.35E+07	7.00E+07	3.43	0.147	0.499	
ACB monolithic flexure	0.100	0.547	316 annealed bar	20.0	0.05	1.75E+07	2.15E+07	11.16	0.272	0.552	
ACB monolithic flexure	0.100	0.547	316 annealed bar	20.0	0.10	1.75E+07	2.08E+07	11.57	0.293	0.563	
CMB monolithic flexure	0.150	0.547	316 annealed bar	153.5	0.05	5.98E+07	8.17E+07	2.94	0.195	0.514	FS is only 2.51 with 304/304L
CMB monolithic flexure	0.154	0.547	316 annealed bar	153.5	0.05	5.98E+07	7.97E+07	3.01	0.203	0.518	FS is only 2.57 with 304/304L
CMB monolithic flexure	0.154	1.000	316 annealed bar	153.5	0.05	5.98E+07	7.97E+07	3.01	0.158	0.502	FS is only 2.57 with 304/304L
CMB monolithic flexure	0.154	0.308	316 annealed bar	153.5	0.05	5.98E+07	7.86E+07	3.05	0.251	0.540	
CMB monolithic flexure	0.154	0.547	316 annealed bar	153.5	0.10	5.98E+07	6.80E+07	3.53	0.214	0.522	FS is 3.01 with 304/304L

Arm Cavity Baffle (suspended mass/assembly):

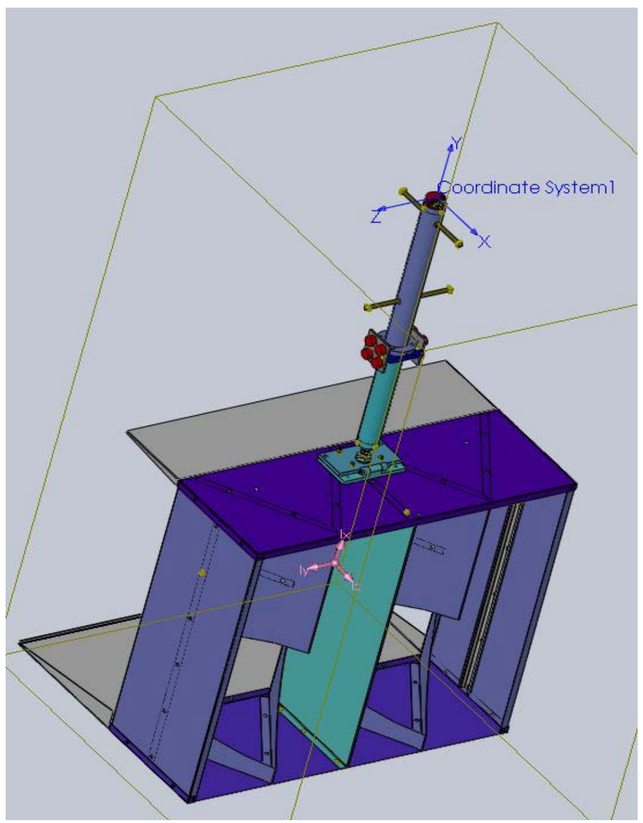

Simple Model:

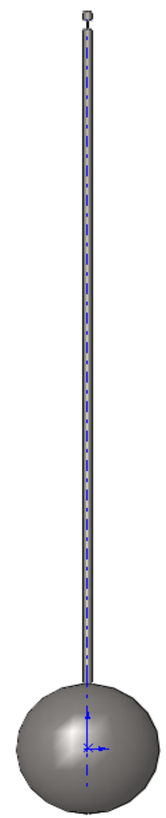

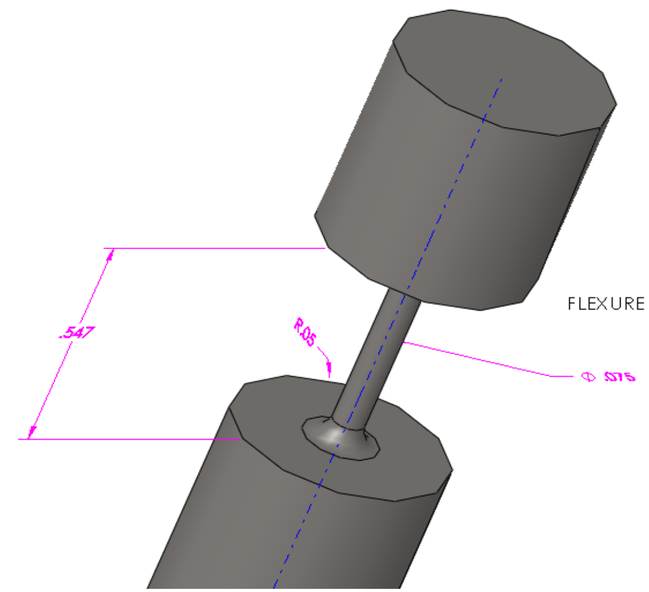

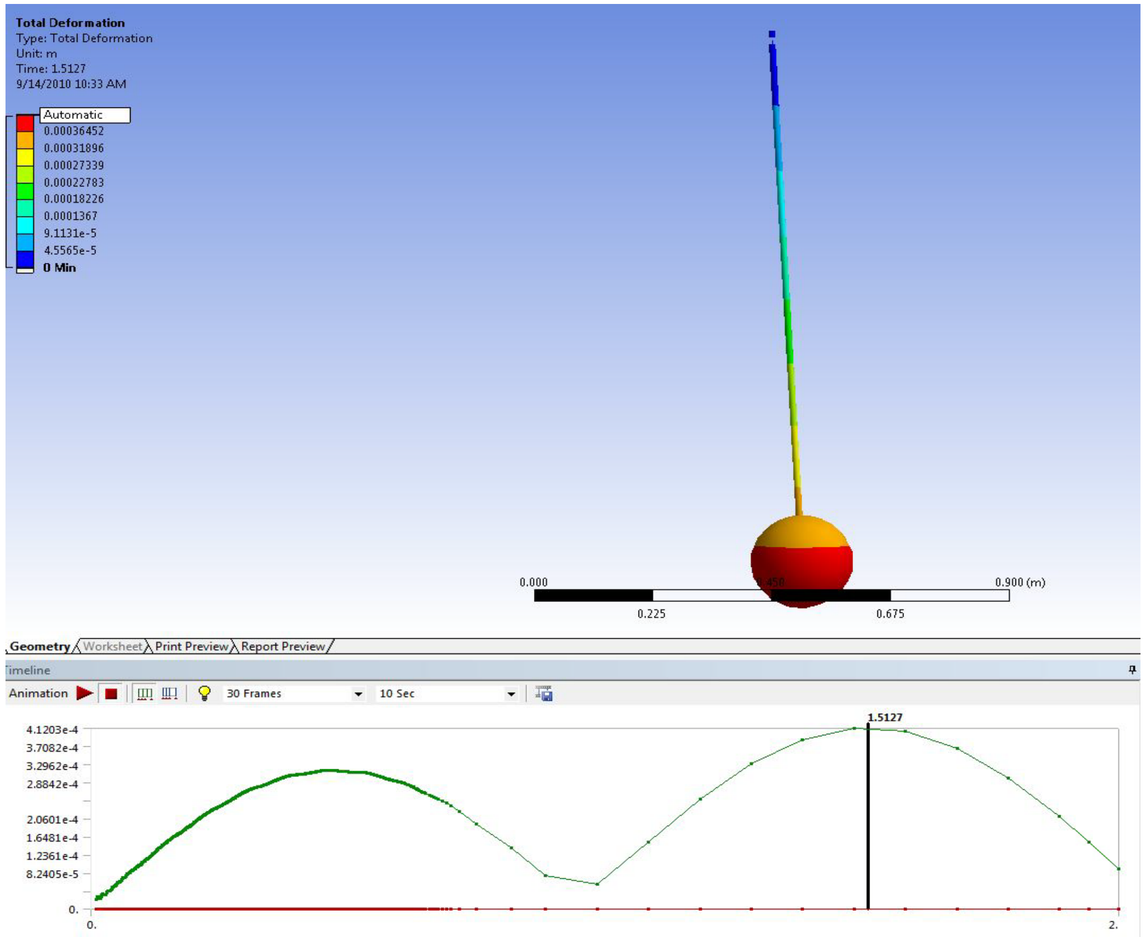
Total Deformation
Type: Total Deformation
Unit: m
Time: 1.5127
9/14/2010 10:33 AM
Automatic
0.00036452
0.00031896
0.00027339
0.00022783
0.00018226
0.0001367
9.1131e-5
4.5565e-5
0 Min
0.000
0.900 (m)
0.225
0.675
Geometry
Worksheet
Print Preview
Report Preview
Timeline
Animation
30 Frames
10 Sec
4.1203e-4
3.7082e-4
3.2962e-4
2.8842e-4
2.0601e-4
1.6481e-4
1.2361e-4
8.2405e-5
0.
1.5127
0.
2.

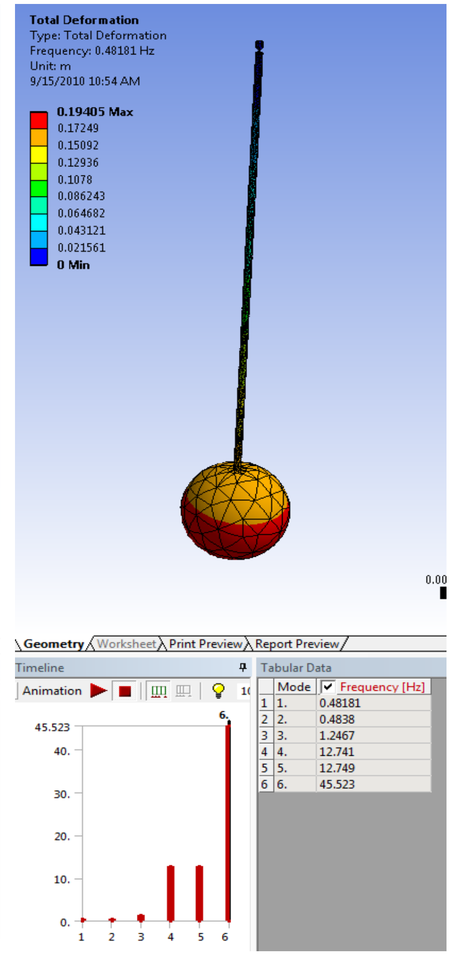
Total Deformation
Type: Total Deformation
Frequency: 0.48181 Hz
Unit: m
9/15/2010 10:54 AM
0.19405 Max
0.17249
0.15092
0.12936
0.1078
0.086243
0.064682
0.043121
0.021561
0 Min
Geometry
Worksheet
Print Preview
Report Preview
Timeline
Animation
Tabular Data
Mode
Frequency [Hz]
1 1. 0.48181
2 2. 0.4838
3 3. 1.2467
4 4. 12.741
5 5. 12.749
6 6. 45.523
45.523
40.
30.
20.
10.
0.
1
2
3
4
5
6

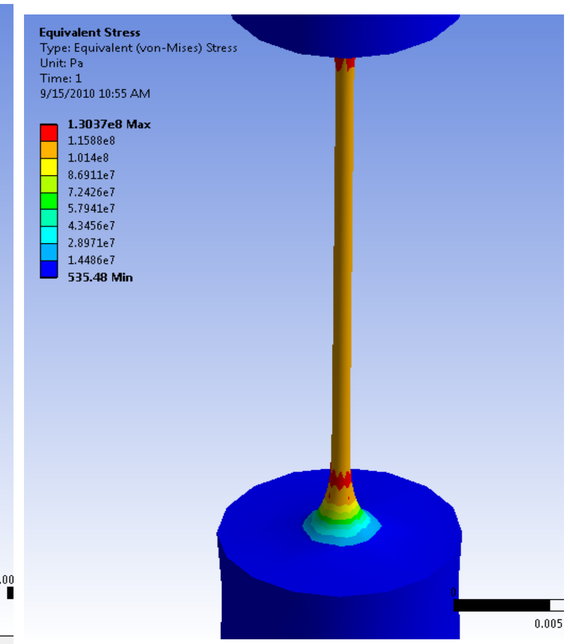
Equivalent Stress
Type: Equivalent (von-Mises) Stress
Unit: Pa
Time: 1
9/15/2010 10:55 AM
1.3037e8 Max
1.1588e8
1.014e8
8.6911e7
7.2426e7
5.7941e7
4.3456e7
2.8971e7
1.4486e7
535.48 Min
0.005

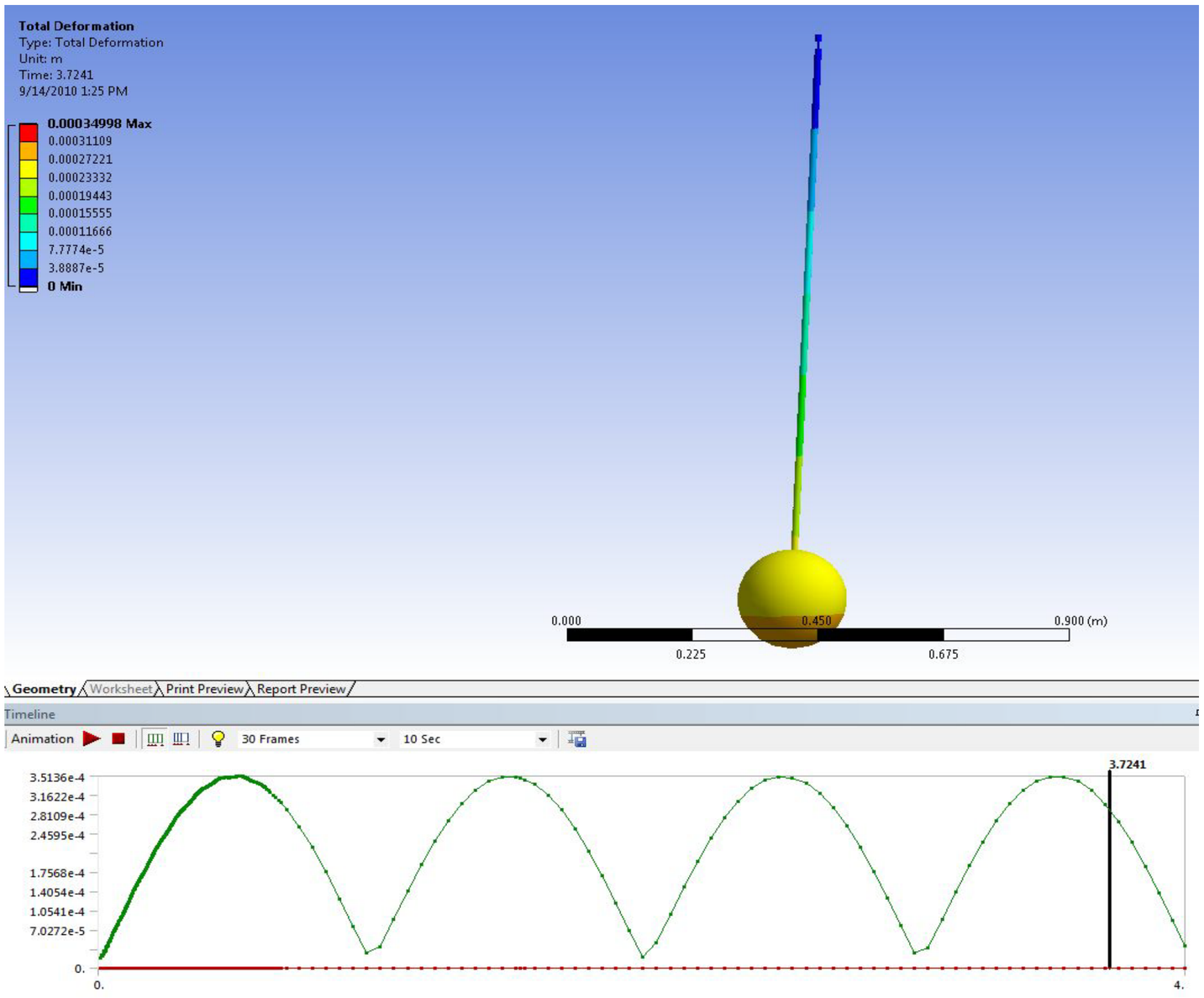
Total Deformation
Type: Total Deformation
Unit: m
Time: 3.7241
9/14/2010 1:25 PM
0.00034998 Max
0.00031109
0.00027221
0.00023332
0.00019443
0.00015555
0.00011666
7.7774e-5
3.8887e-5
0 Min
0.000
0.450
0.900 (m)
0.225
0.675
Geometry
Worksheet
Print Preview
Report Preview
Timeline
Animation
30 Frames
10 Sec
3.7241
3.5136e-4
3.1622e-4
2.8109e-4
2.4595e-4
1.7568e-4
1.4054e-4
1.0541e-4
7.0272e-5
0.
0.
4.

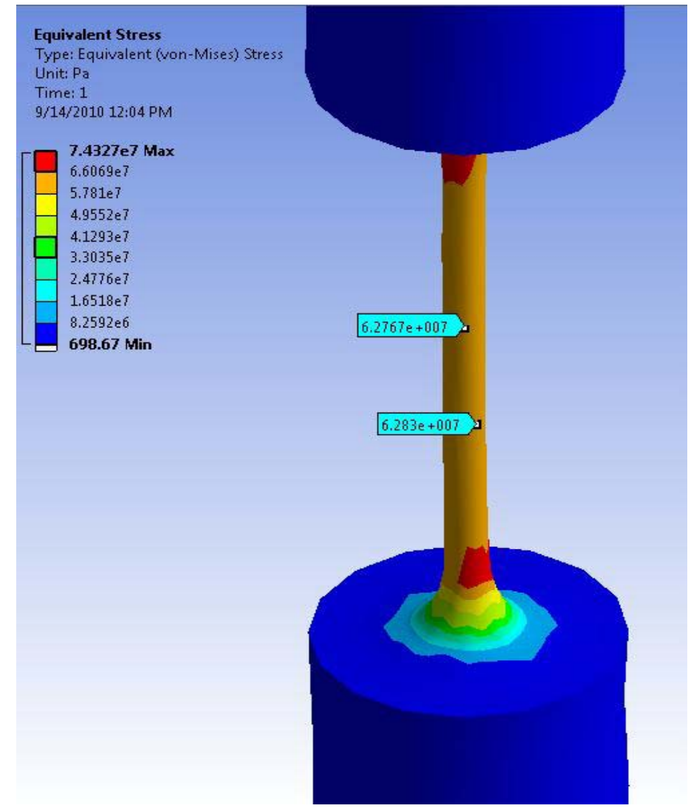
Equivalent Stress
Type: Equivalent (von-Mises) Stress
Unit: Pa
Time: 1
9/14/2010 12:04 PM
7.4327e7 Max
6.6069e7
5.781e7
4.9552e7
4.1293e7
3.3035e7
2.4776e7
1.6518e7
8.2592e6
698.67 Min
6.2767e+007
6.283e+007

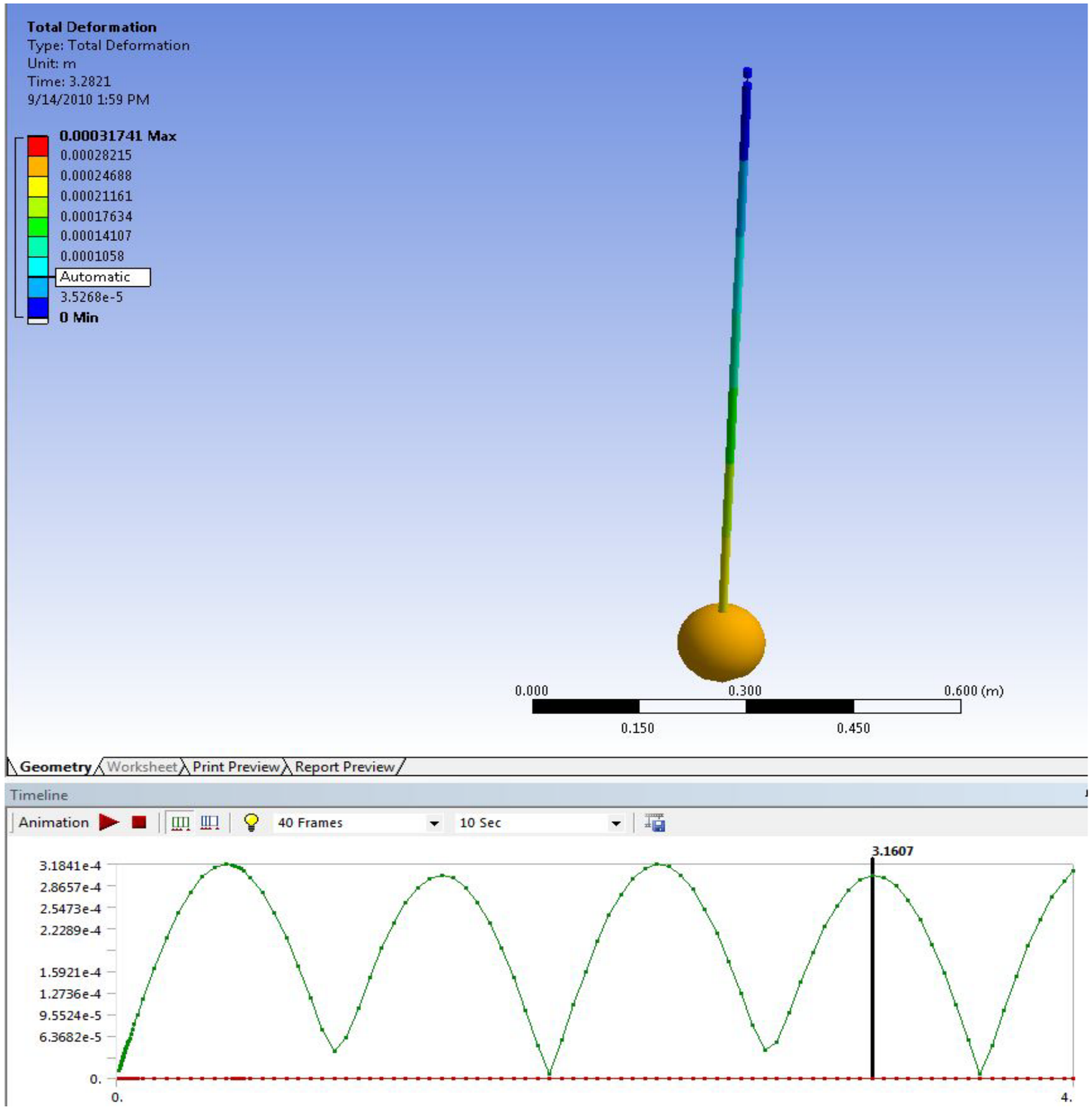

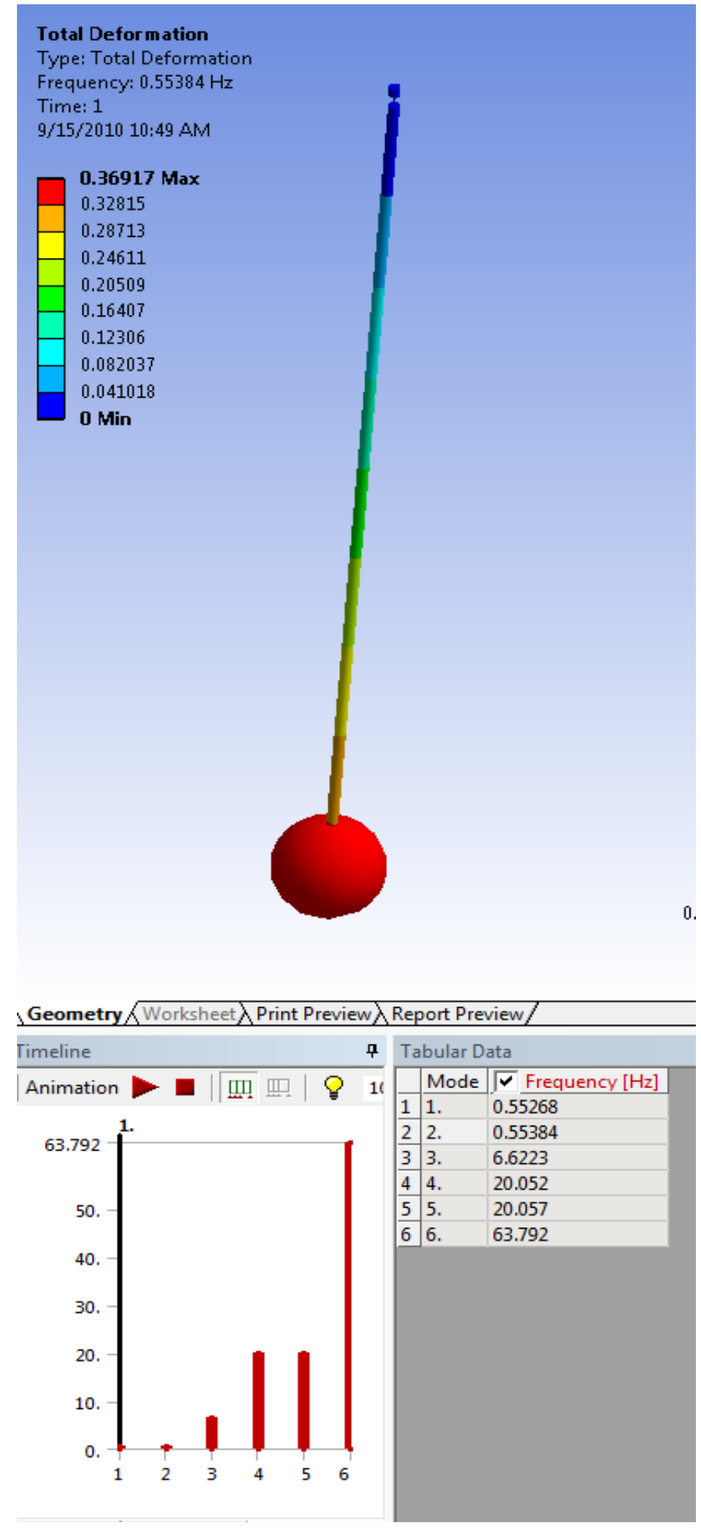

	Mode	Frequency [Hz]
1	1.	0.55268
2	2.	0.55384
3	3.	6.6223
4	4.	20.052
5	5.	20.057
6	6.	63.792

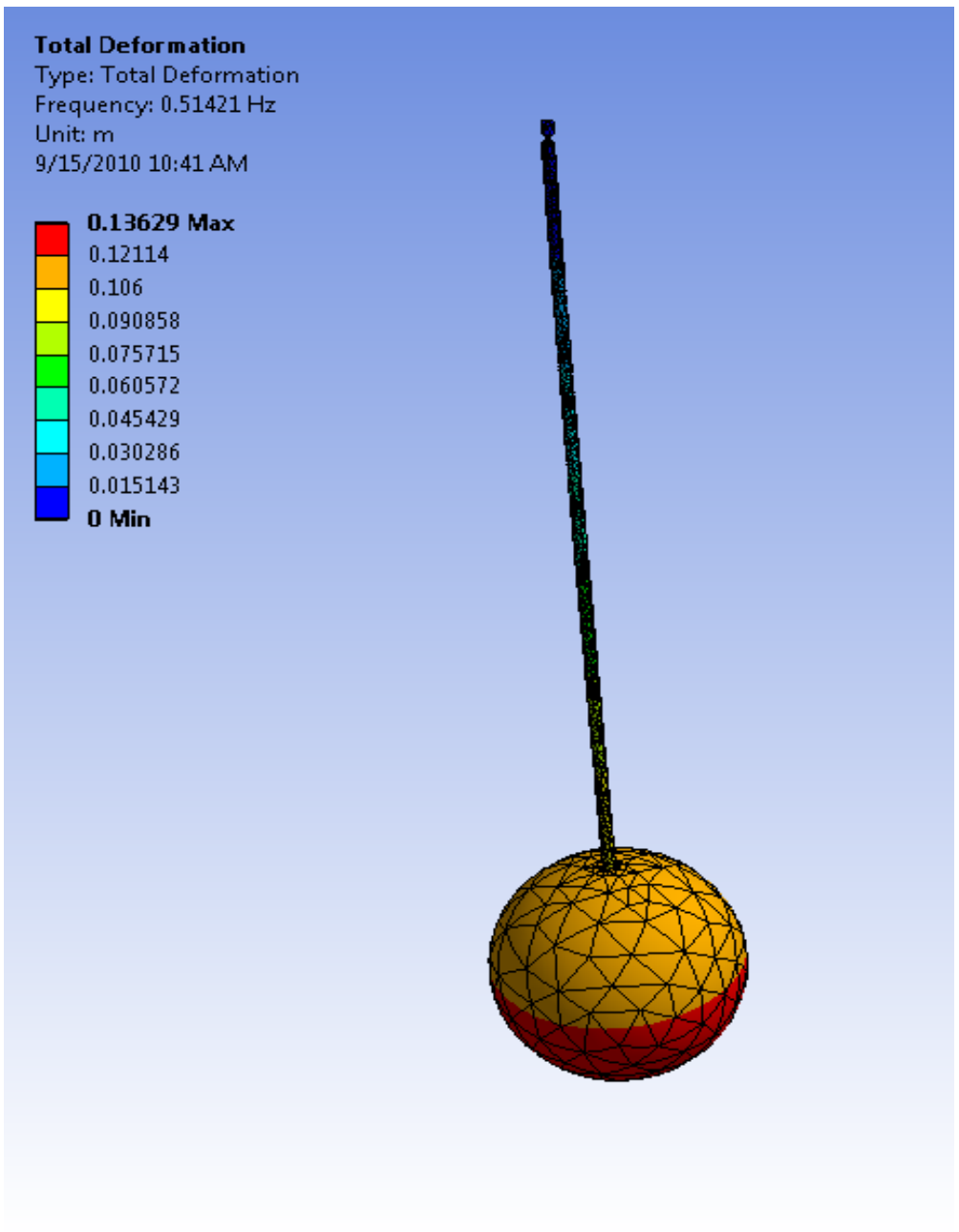

Geometry | Worksheet | Print Preview | Report Preview

Timeline

Animation 10 Frames

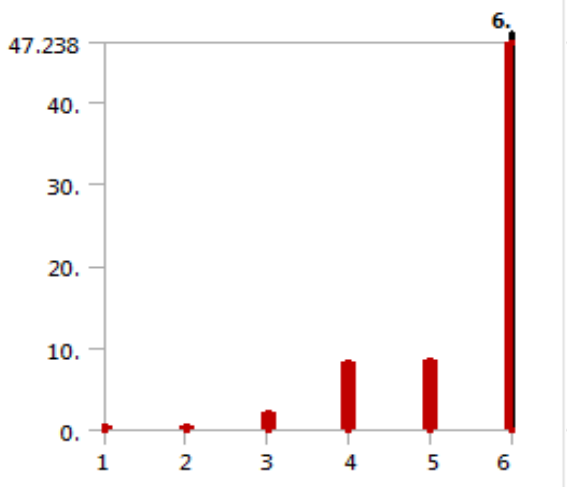

Tabular Data

	Mode	Frequency [Hz]
1	1.	0.51421
2	2.	0.51453
3	3.	2.0765
4	4.	8.384
5	5.	8.3896
6	6.	47.238