CALIFORNIA INSTITUTE OF TECHNOLOGY
MASSACHUSETTS INSTITUTE OF TECHNOLOGY

DCN No. E990200-00
SHEET 1 OF 1

DOCUMENT CHANGE NOTICE (DCN)

DOCUMENT No. (DOC-REV-GP. ID)	TITLE	NEW REV.
D990143-A	Cavity Beam Dump Mounting Bracket Assembly	B
D990149-A	Cavity Beam Dump Mounting Bracket Angle	B
D990150-A	Cavity Beam Dump Mounting Bracket Gusset	B
D990151-A	Cavity Beam Dump Mounting Bracket Backplate 1	B
D990152-A	Cavity Beam Dump Mounting Bracket Backplate 2	B
D990153-A	Material List - Cavity Beam Dump Mounting Bracket Assembly	B

CHANGE DESCRIPTION (FROM/TO):

Changes from original designs and prototypes.

ACTIONS: ☒ Incorporate change ☐ Attach DCN to drawing(s) ☐ Other action (specify):

DISPOSITION OF HARDWARE (IDENTIFY SERIAL NUMBERS)

- ☐ No hardware affected (record change only)
- ☐ List S/Ns which comply already:
- ☐ List S/Ns to be reworked or scrapped:
- ☒ List S/Ns to be built with this change: D990150: 009 & up, all other parts: 005 & up
- ☐ List S/Ns to be retested per this change:
- ☐
- ☐
- ☐
- ☐

DCN DISTRIBUTION (X=incl. docs)

Althouse	Barish	Coles
x Coyne	Lazzarini	Lindquist
Sanders	Shoemaker	Stapfer
Tyler	Weiss	Whitcomb

Camp x Conley
x Jones x Smith

SAFETY, COST, SCHEDULE, REQUIREMENTS IMPACT? ☒ No ☐ Yes (If yes, enter Change Request number)

APPROVALS:		DATE	OTHER APPROVALS (specify)	DATE
ORIGINATOR:	C. Conley	6-2-99		
TASK LEADER:	Michael R Smith	6/2/99		
GROUP LEADER:	Denise Coyne	6/3/99		
DCC RELEASE:	Lynda Suarez	6/23/99		

LIGO Form DCN-01 (3/97)

NOTES: (UNLESS OTHERWISE SPECIFIED)

1. SEE SEPERATE MATERIALS LIST LIGO-D990153.

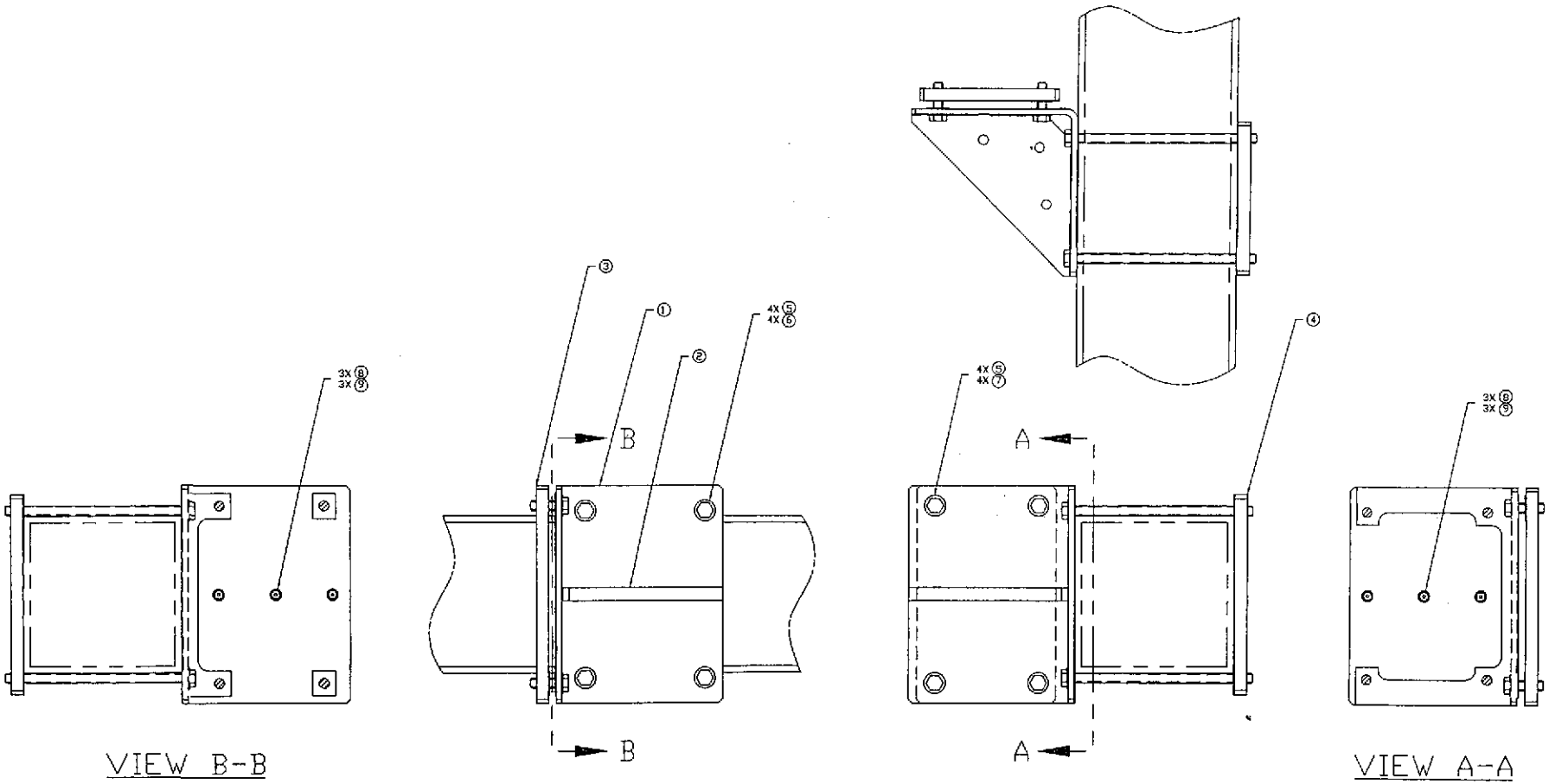

UNLESS OTHERWISE SPECIFIED
DIMENSIONS ARE IN INCHES

TOLERANCES:
FRACTIONAL ±
ANGULAR ±
ANGULAR:MACH ± BEND ±
TWO PLACE DECIMAL ±
THREE PLACE DECIMAL ±
FINISHED SURFACE RMS
BREAK CORNERS ON CUT:
REMOVE ALL BURRS

MATERIAL | HEAT TREAT: | FINISH

USED ON | NEXT ASS'Y: D990145

DWG. NO.	DESCRIPTION
REFERENCE DRAWINGS	

REV	DESCRIPTION	APPR'D	CHECK	DRWN	DATE
B	DCN E990200			Corley	5-3-99
A	DCN E990133			Corley	3-22-99

ISSUE DESCRIPTION

LIGO CALIFORNIA INSTITUTE OF TECHNOLOGY
MASSACHUSETTS INSTITUTE OF TECHNOLOGY

CAVITY BEAM DUMP
MOUNTING BRACKET ASSEMBLY

CAD FILE: D990143-B.dwg | SIZE: B | DWG. NO. D990143-B

SCALE: NTS | SHEET 1 OF 1

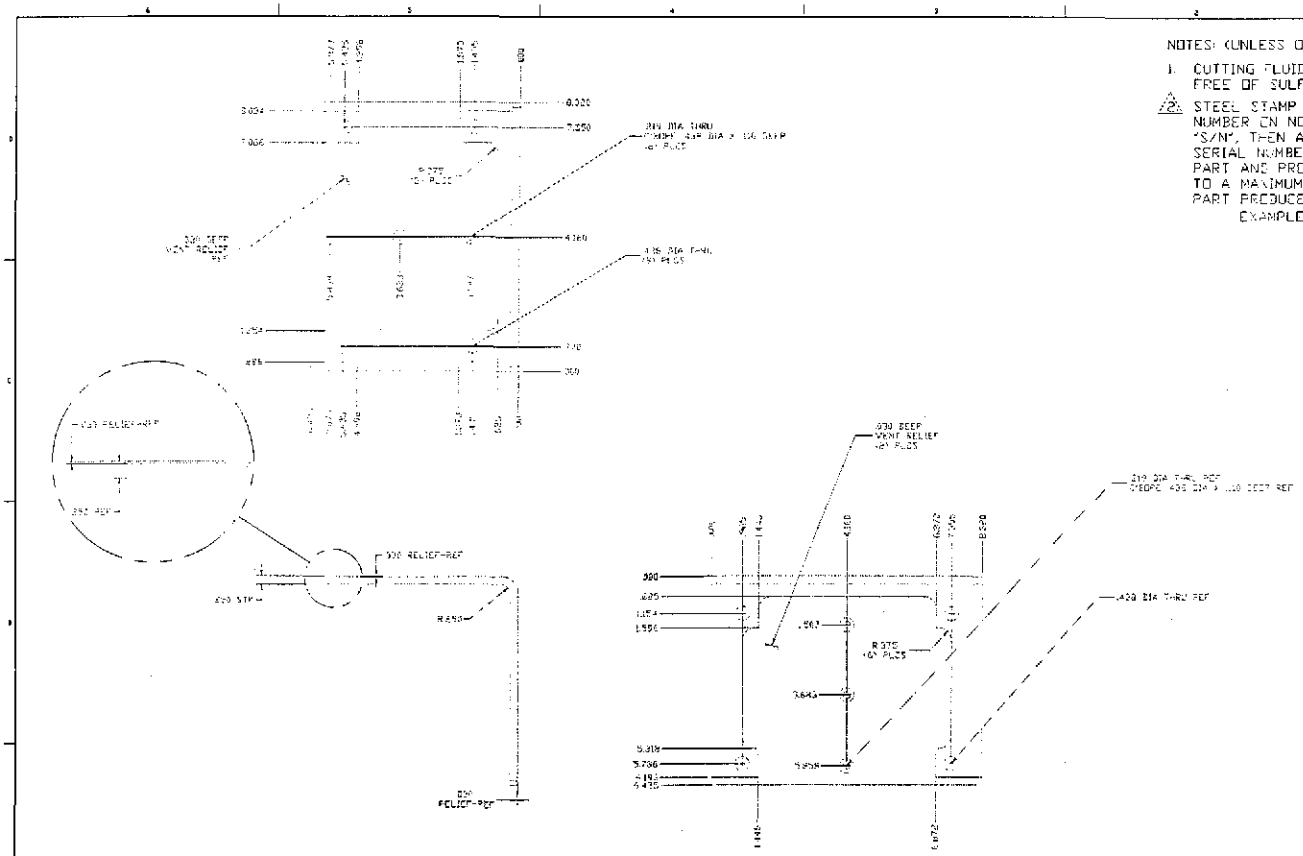

NOTES: (UNLESS OTHERWISE SPECIFIED)

1. CUTTING FLUIDS TO BE WATER SOLUBLE AND FREE OF SULFUR, CHLORINE, & SILICONE.
2. STEEL STAMP OR ENGRAVE THE DRAWING PART NUMBER ON NOTED FACE OF PART FOLLOWED BY "S/N", THEN A THREE DIGIT SERIAL NUMBER. SERIAL NUMBERS TO START AT 001 FOR FIRST PART AND PROCEED IN A CONSECUTIVE MANNER TO A MAXIMUM OF 999, FOR EACH SUCCEEDING PART PRODUCED. USE 0.13 HIGH CHARACTERS.
   EXAMPLE: D990038-A S/N 001

DWG NO	DESCRIPTION
REFERENCE DRAWINGS	

UNLESS OTHERWISE SPECIFIED
DIMENSIONS ARE IN INCHES
TOLERANCES:
FRACTIONAL ± 1/64
ANGULAR ± 1/2°
ANGULAR/MACH ± BEND ±
TWO PLACE DECIMAL ±.02
THREE PLACE DECIMAL ±.010
FINISHED SURFACE RMS
BREAK CORNERS ON DIM .005-.010
REMOVE ALL BURRS

MATERIAL: 300 SERIES STAINLESS STEEL .250 THICK PLATE | HEAT TREAT: | FINISH:
USED ON | MEET ASTM D990043

REV	DESCRIPTION	CHECK	APPR'D	CHECK'D	DRWN	DATE
B	RELEASE	D990200			Carney	5-6-99
A	RELEASE	D990106			Hershey	3-23-99

ISSUE DESCRIPTION

LIGO CALIFORNIA INSTITUTE OF TECHNOLOGY MASSACHUSETTS INSTITUTE OF TECHNOLOGY

CAVITY BEAM DUMP
MOUNTING BRACKET ANGLE

CAD FILE: D990149-B.dwg | SIZE: B | DWG NO: D990149-B
SCALE: NTS | SHEET: 1 OF 1

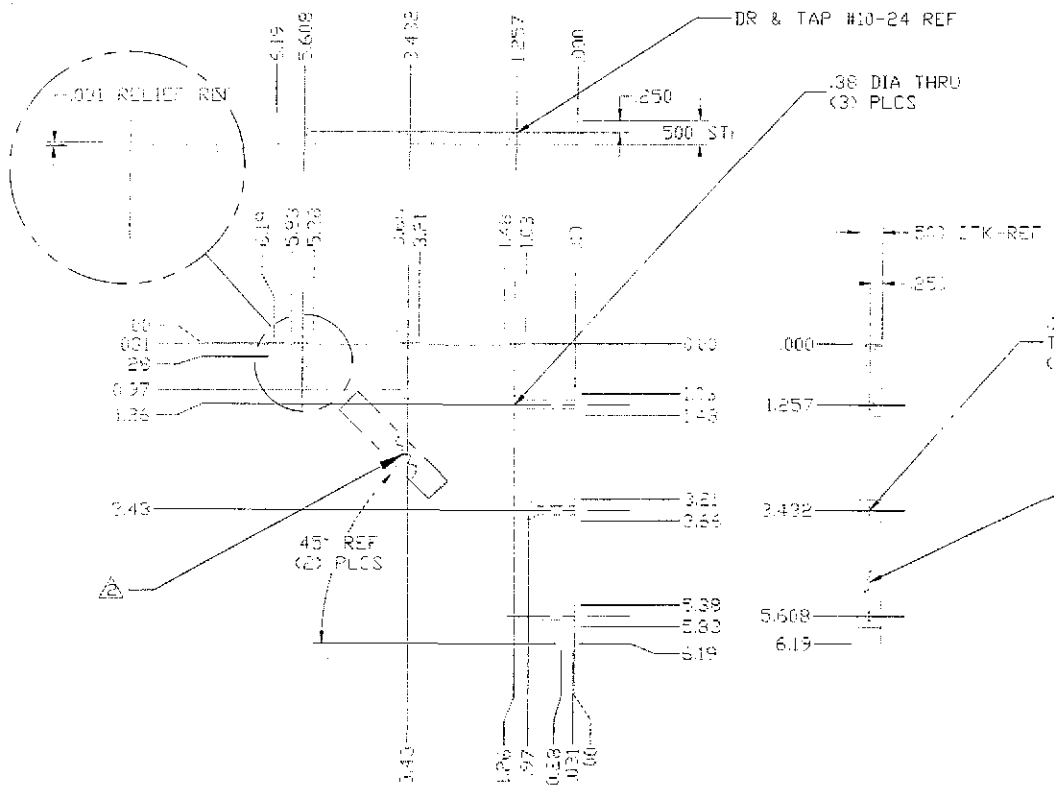

NOTES: (UNLESS OTHERWISE SPECIFIED)

1. CUTTING FLUIDS TO BE WATER SOLUBLE AND FREE OF SULFUR, CHLORINE, & SILICONE.
2. STEEL STAMP OR ENGRAVE THE DRAWING PART NUMBER ON NOTED FACE OF PART FOLLOWED BY "S/N", THEN A THREE DIGIT SERIAL NUMBER. SERIAL NUMBERS TO START AT 001 FOR FIRST PART AND PROCEED IN A CONSECUTIVE MANNER TO A MAXIMUM OF 999. FOR EACH SUCCEEDING PART PRODUCED. USE 0.13 HIGH CHARACTERS.
   EXAMPLE: D990038-A S/N 001

DWG. NO.	DESCRIPTION
REFERENCE DRAWINGS	

UNLESS OTHERWISE SPECIFIED
DIMENSIONS ARE IN INCHES
TOLERANCES:
FRACTIONAL ± 1/64
ANGULAR ± 1/2°
ANGULAR/MACH ± PEND ±
TWO PLACE DECIMAL ±.02
THREE PLACE DECIMAL ±.010
FINISHED SURFACE RHS
BREAK CORNERS ON .005-.010
REMOVE ALL BURRS

MATERIAL: 6061-T6 ALUMINUM | HEAT TREAT: | FINISH:
USED ON | NEXT ASSY: D990143

REV	DESCRIPTION	CHECK	APPR'D	CHECK	DRWN	DATE
B	RD EASE	E990200			Conley	5-6-99
A	RELEASE	E990168			Conley	3-23-99

ISSUE DESCRIPTION

LIGO CALIFORNIA INSTITUTE OF TECHNOLOGY MASSACHUSETTS INSTITUTE OF TECHNOLOGY

CAVITY BEAM DUMP
MOUNTING BRACKET GUSSET

DRAWN: Rubing | DRAWING NO. D990150-B | REV B
SCALE: NTS | SHEET 1 OF 1

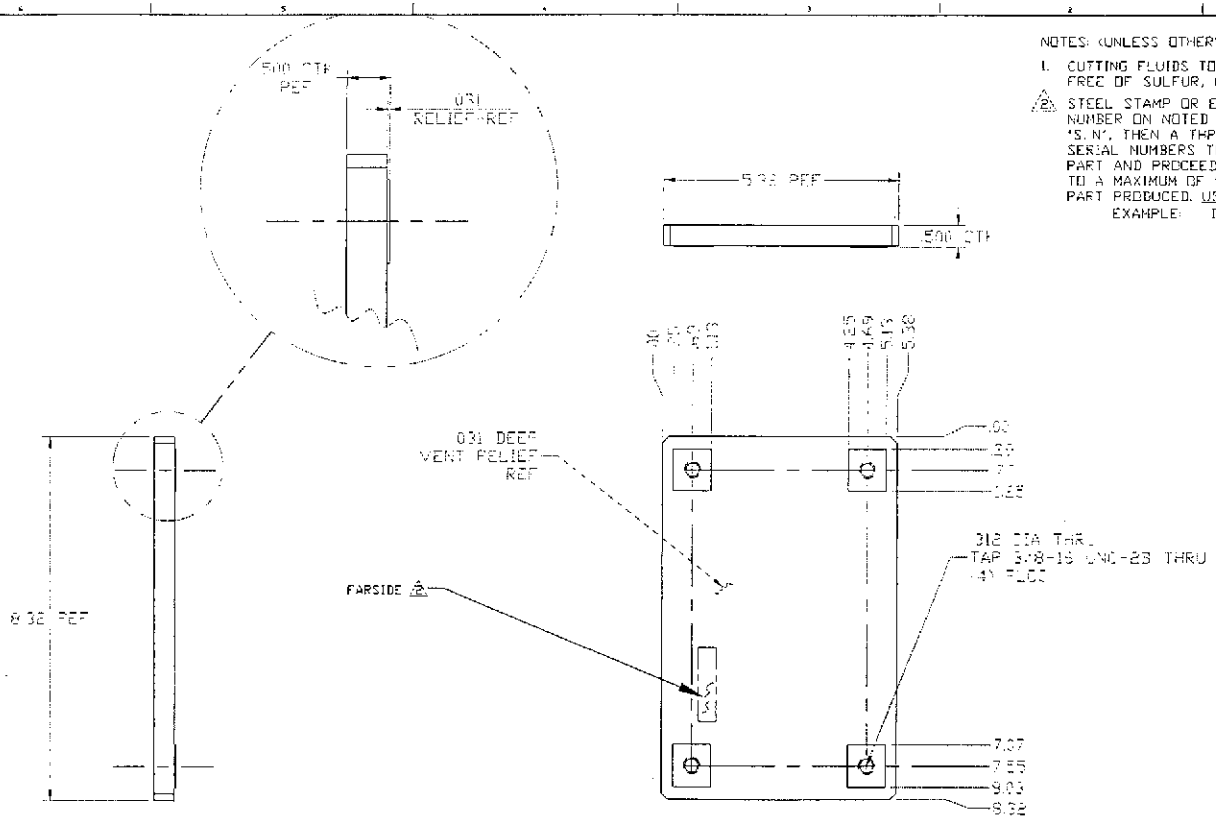

NOTES: (UNLESS OTHERWISE SPECIFIED)

1. CUTTING FLUIDS TO BE WATER SOLUBLE AND FREE OF SULFUR, CHLORINE, & SILICONE.
2. STEEL STAMP OR ENGRAVE THE DRAWING PART NUMBER ON NOTED FACE OF PART FOLLOWED BY 'S.N', THEN A THREE DIGIT SERIAL NUMBER. SERIAL NUMBERS TO START AT 001 FOR FIRST PART AND PROCEED IN A CONSECUTIVE MANNER TO A MAXIMUM OF 999, FOR EACH SUCCEEDING PART PRODUCED. USE 0.13 HIGH CHARACTERS.
   EXAMPLE: D990038-A S/N 001

REV	DESCRIPTION	DCN	APPR'D	CHECK	DRAWN	DATE
B	RELEASE	E990800			Conley	5-6-99
A	RELEASE	C990108			Conley	3-23-99

ISSUE DESCRIPTION

SUG. NO.	DESCRIPTION
	REFERENCE DRAWINGS

UNLESS OTHERWISE SPECIFIED DIMENSIONS ARE IN INCHES

TOLERANCES:
FRACTIONAL ± 1/64
ANGULAR ± 1/2°
ANGULAR(W/ ± SCALE) ±
TWO PLACE DECIMAL ±.02
THREE PLACE DECIMAL ±.010
FINISHED SURFACE RMS
BREAK CORNERS (IN DEPTH .005-.010)
REMOVE ALL BURRS

MATERIAL: 6061-T6 ALUMINUM
HEAT TREAT:
FINISH:
USED ON
NEXT ASS'Y: D990143

LIGO CALIFORNIA INSTITUTE OF TECHNOLOGY MASSACHUSETTS INSTITUTE OF TECHNOLOGY

CAVITY BEAM DUMP
MOUNTING BRACKET BACKPLATE 1

CAD FILE: D990151-B.dwg
DWG NO: D990151-B
REV: B
SCALE: NTS
SHEET: 1 OF 1

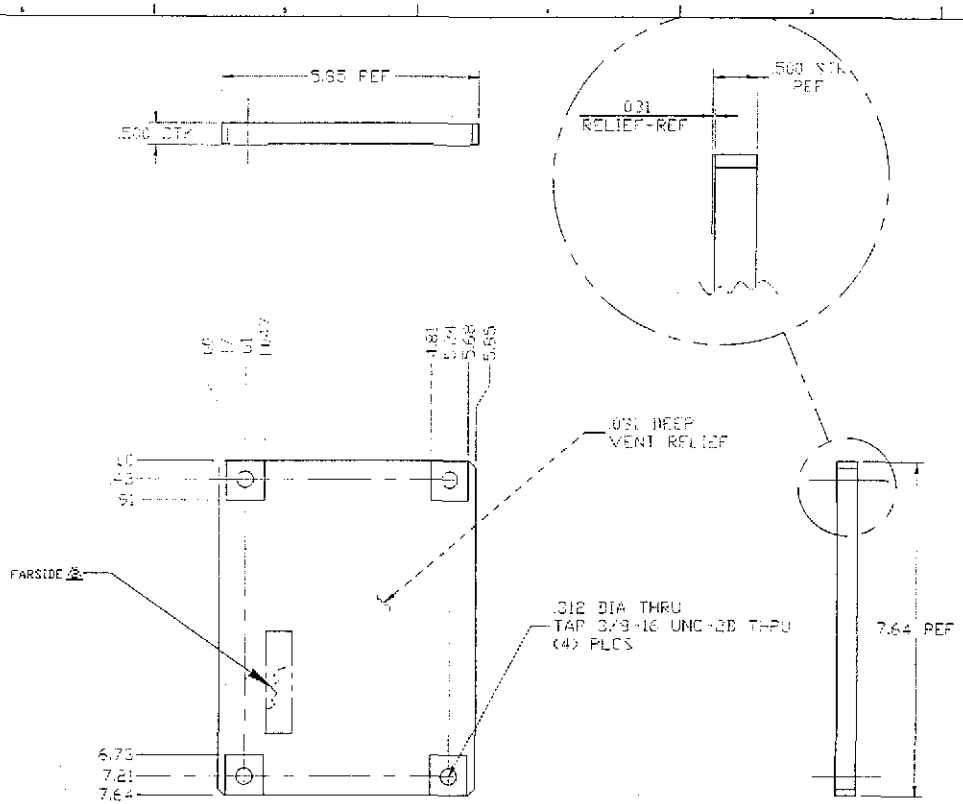

NOTES: (UNLESS OTHERWISE SPECIFIED)

1. CUTTING FLUIDS TO BE WATER SOLUBLE AND FREE OF SULFUR, CHLORINE, & SILICONE.
2. STEEL STAMP OR ENGRAVE THE DRAWING PART NUMBER ON NOTED FACE OF PART FOLLOWED BY "S/N", THEN A THREE DIGIT SERIAL NUMBER. SERIAL NUMBERS TO START AT 001 FOR FIRST PART AND PROCEED IN A CONSECUTIVE MANNER TO A MAXIMUM OF 999. FOR EACH SUCCEEDING PART PRODUCED. USE .013 HIGH CHARACTERS.
   EXAMPLE: D990038-A S/N 001

UNLESS OTHERWISE SPECIFIED
DIMENSIONS ARE IN INCHES

TOLERANCES:
FRACTIONAL ± 1/64
ANGULAR ± 1/2°
ANGULAR/MACH ± BEND ±
TWO PLACE DECIMAL ±.02
THREE PLACE DECIMAL ±.010
FINISHED SURFACE RMS
BREAK CORNERS .04 (OUT) .005-.010
REMOVE ALL BURRS

MATERIAL: 6061-T6 ALUMINUM
HEAT TREAT:
FINISH:

USED ON:
NEXT ASSY: D990103

DWG. NO.	DESCRIPTION
REFERENCE DRAWINGS	

REV.	DESCRIPTION	BCH	APPR/DI CHECK	DRWN	DATE
B	RELEASE	D990208		Conley	3-6-98
A	RELEASE	D990108		Conley	3-23-99

ISSUE DESCRIPTION

LIGO CALIFORNIA INSTITUTE OF TECHNOLOGY MASSACHUSETTS INSTITUTE OF TECHNOLOGY

CAVITY BEAM DUMP
MOUNTING BRACKET BACKPLATE 2

CAD FILE: D990152-B.dwg
SIZE: B
DWG. NO.: D990152-B
SCALE: NTS
SHEET: 1 OF 1

CALIFORNIA INSTITUTE OF TECHNOLOGY
MASSACHUSETTS INSTITUTE OF TECHNOLOGY

MATERIAL LIST

D990153-B
DRWG NO. REV. GID

SHEET 1 OF 1
ASSY NO. D990143

TITLE

Cavity Beam Dump Mounting Bracket Assembly

APPROVALS:		DATE	REV	DCN NO	BY	CHK	DCC	DATE
DRAWN:	C. Conley	3-29-99	A	E990133	C.C.			
CHECKED:		5-5-99	B	E990200	C.C.			
APPROVED:								
DCC RELEASE:								

REF.	QTY.	PART No.	DESCRIPTION
1	1	D990149	Mounting Bracket Angle
2	1	D990150	Gusset
3	1	D990151	Backplate 1
4	1	D990152	Backplate 2
5	8	WFV-38	3/8 nom X .045 thk Vented Flat Washer (U-C Components)
6	4	92186A999	3/8-16 X 7.00 Hex Head Screw - 316 stainless steel, (McMaster-Carr)
7	4	92186A626	3/8-16 X 1.25 Hex Head Screw - 316 stainless steel, (McMaster-Carr)
8	6	WFV-10	#10 nom X .031 thk Vented Flat Washer (U-C Components)
9	6	93615A360	#10-24 X 1.00 Low Head Socket Cap Screw - 18-8 stainless steel (McMaster-Carr)