REV.	DATE	DCN #	DRAWING TREE #
v1	04 NOV 2011	-	-
v2	10 NOV 2011	E1101060-x0	-
-	-	-	-

NOTES CONTINUED:

5. SCRIBE, ENGRAVE (A VIBRATORY TOOL MAY BE USED), LASER MARK OR MECHANICALLY STAMP (NO INKS OR DYES) DRAWING PART NUMBER, REVISION (AND VARIANT OR "TYPE" IF APPLICABLE) ON NOTED SURFACE OF PART FOLLOWED ON THE NEXT LINE WITH A THREE DIGIT SERIAL NUMBER. SERIAL NUMBERS START AT 001 FOR THE FIRST ARTICLE AND PROCEED CONSECUTIVELY. USE MINIMUM 0.12" HIGH CHARACTERS, UNLESS THE SIZE OF THE PART DICTATES SMALLER CHARACTERS. EXAMPLE: DXXXXXXX-VY, TYPE-XX, S/N XXX

6. APPROXIMATE WEIGHT = 9.00 LB.

7. MACHINE ALL SURFACES TO REMOVE OXIDES AND MILL FINISH, USE OF ABRASIVE REMOVAL TECHNIQUES IS NOT ALLOWED. REFER TO LIGO-E0900364

8. ALL PARTS SHALL BE MANUFACTURED IN ACCORDANCE WITH LIGO SPECIFICATION E0900364.

9. ALL MATERIAL IS TO BE VIRGIN MATERIAL (i.e. NO WELD REPAIRS, PLUGS OR RECYCLED MATERIAL). NO REPAIRS SHALL BE MADE UNLESS APPROVED IN ADVANCE, AND IN WRITING, BY LIGO LABORATORY. REFER TO LIGO-E0900364.

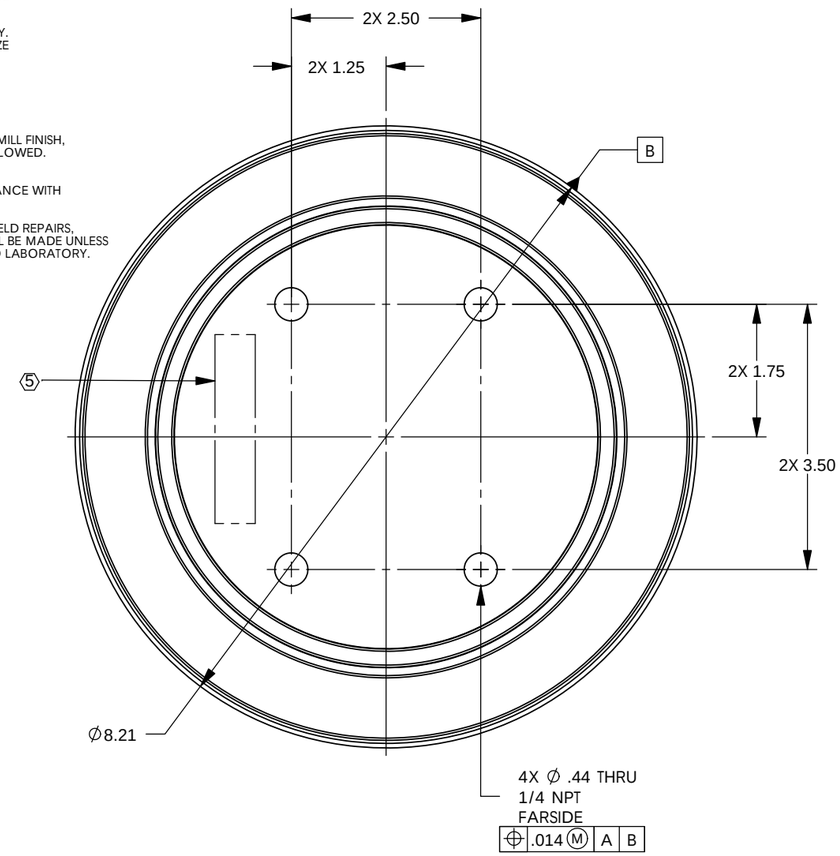

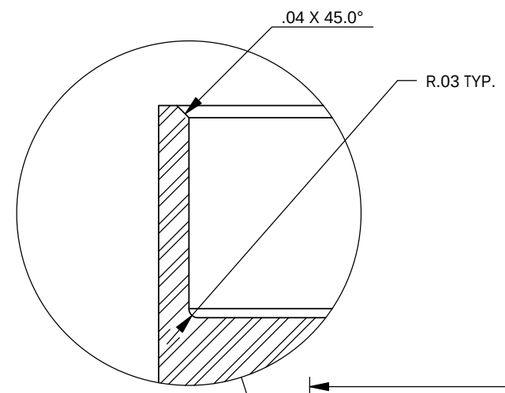

DETAIL A
SCALE 2 : 1

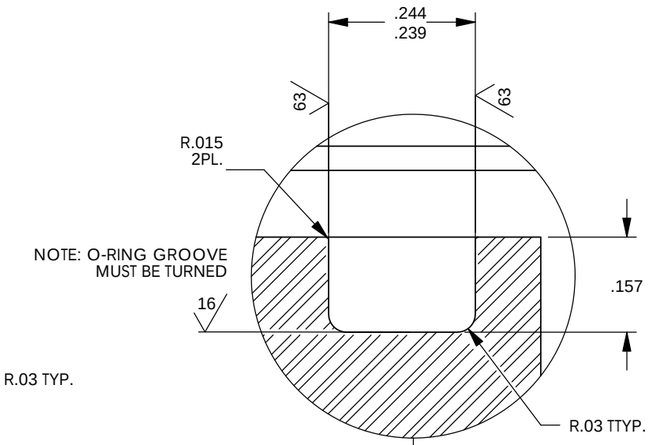

DETAIL B
SCALE 4 : 1

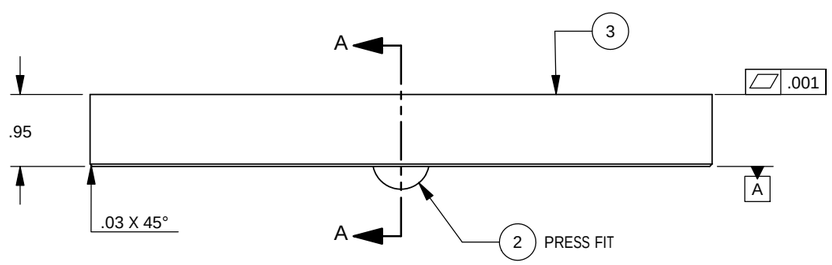

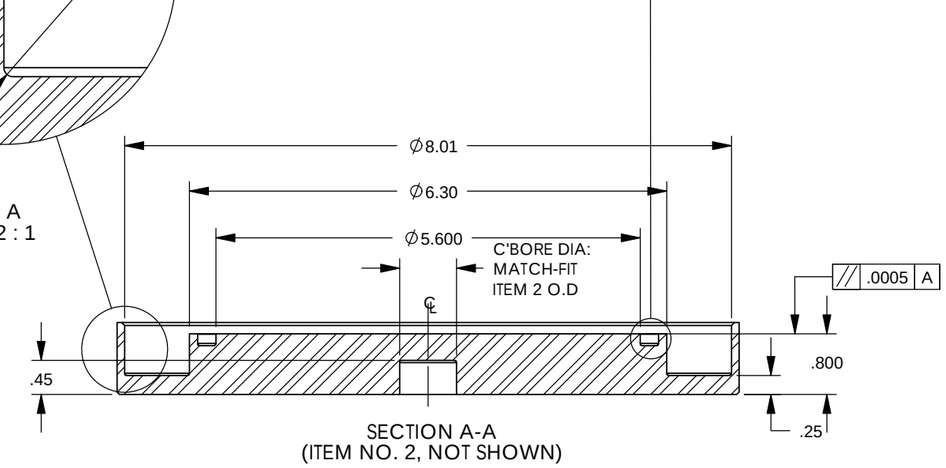

SECTION A-A
(ITEM NO. 2, NOT SHOWN)

ITEM NO.	PART NUMBER	DESCRIPTION	MATERIAL	QTY.
2	-	PRECISION BALL, .750 O.D, NITRONIC 60	Nitronic 60	1
3	D1102156-1	ALIGO, AOS, SEPTUM VIEWPORT LEAK TEST FIXTURE, PROOF TEST CAP	304 SSTL	1

PARTS LIST

NOTES AND TOLERANCES: (UNLESS OTHERWISE SPECIFIED)

DIMENSIONS ARE IN INCHES

TOLERANCES:
.XX ± .01
.XXX ± .005

ANGULAR ± 0.5°

1. INTERPRET DRAWING PER ASME Y14.5-1994.
2. REMOVE ALL SHARP EDGES, .005-.015. FOR MACHINED PARTS. ROUND ALL EDGES APPROXIMATLEY R.02 FOR SHEET METAL PARTS.
3. DO NOT SCALE FROM DRAWING.
4. ALL MACHINING FLUIDS MUST BE FULLY SYNTHETIC, FULLY WATER SOLUBLE AND FREE OF SULFUR, SILICONE, AND CHLORINE.

MATERIAL: SEE PARTS LIST
FINISH: 63 µinch

LIGO — CALIFORNIA INSTITUTE OF TECHNOLOGY / MASSACHUSETTS INSTITUTE OF TECHNOLOGY

SYSTEM: ADVANCED LIGO
SUB-SYSTEM: AOS
NEXT ASSY: D1102157

PART NAME: ALIGO, AOS, SEPTUM VIEWPORT LEAK TEST FIXTURE, PROOF TEST CAP ASSY.

DESIGNER	J.LEWIS	07 OCT 2011
DRAFTER	E.SANCHEZ	04 NOV 2011
CHECKER	SEE DCC	SEE DCC
APPROVAL	SEE DCC	SEE DCC

SIZE: B
DWG. NO.: D1102156
REV.: v2
SCALE: 1:2
PROJECTION:
SHEET 1 OF 1

D1102156 aLIGO, AOS,SEPTUM VIEWPORT LEAK TEST FIXTURE, PROOF TEST CAP ASSY, PART PDM REV: X-000, DRAWING PDM REV: X-002