LIGO LABORATORY
California Institute of Technology
1200 E. California Blvd.
Pasadena, CA 91125

Statement of Work
Manifold Cryopump Tube Baffle ETM
Weldment Assembly
C1001790-v3

1.0 Scope

This Statement of Work (SOW) is for the fabrication of two Manifold Cryopump Tube Baffle ETMx and two Manifold Cryopump Tube Baffle ETMy weldment assemblies. The primary baffle piece parts are large. A completely assembled baffle will reside within an 8' by 8' area. This Manifold Cryopump Tube baffle will reside inside ultra-high vacuum. Materials, fabrication processing and cleanliness must adhere to the requirements specified within the LIGO control documents.

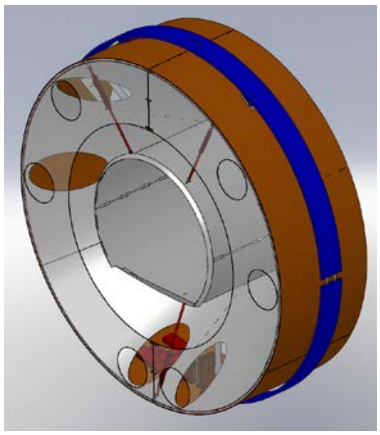

2.0 Document Access

Many supplemental documents and specifications are incorporated into and made a part this Statement of Work. Click on the document links to access these documents from the LIGO Document Control Center (DCC) or go on line to the LIGO Public DCC at https://dcc.ligo.org/ to access the DCC#.

3.0 Commercial Terms and Applicable LIGO Specifications:

Note: The documents listed below are invoked for this Statement of Work and comprise additional requirements which are integral to this Statement of Work.

- LIGO-C080185-v1 LIGO Commercial Items or Services Contract General Provisions
- LIGO-Q0900001-v5 Advanced LIGO Supplier Quality Requirements
- LIGO-Q1100003-v1 Acceptable Quality Level (AQL) for Inspection of LIGO Components
- LIGO-E0900364-v8 Metal Components for use in the Advanced LIGO Vacuum System
- LIGO-E0900048-v9 Welding Specification for Weldments used within the Advanced LIGO Vacuum System

4.0 Quality System:

Referring to the above referenced LIGO Specification Q0900001, Suppliers should include a copy of their current ISO 9001, AS9100, or TS16949 certification in their bid package. Suppliers lacking current certification should send a copy of their Quality Manual with their bid package.

5.0 Parts/Assemblies to be manufactured, Quantity Required, and Inspection requirements:

Note: refer to Section 8.0 for delivery schedule and location

5.1 Parts

Item	Part Number	Description	Material	Total QTY	Starting Serial Number
1	D1003189	FACE PLATE A, ETM X	18 GAUGE 304 SSTL	2	001
2	D1003203	FACE PLATE B, ETM X	18 GAUGE 304 SSTL	2	001
3	D1101502	LOWER FACE PLATE, ETM X	18 GAUGE 304 SSTL	2	001
4	D1200516	LEFT HALF FACE, ETM Y	18 GAUGE 304 SSTL	2	001
5	D1200517	RIGHT HALF FACE, ETM Y	18 GAUGE 304 SSTL	2	001
6	D1200518	LOWER FACE PLATE, ETM Y	18 GAUGE 304 SSTL	2	001

5.2 Assemblies

Item	Part Number	Description	Total QTY	Starting Serial Number
7	D1001348	MANIFOLD-CRYO BAFFLE CYLINDER-SCRAPER ASSEMBLY	4	005
8	D1003184	MANIFOLD -CRYO BAFFLE SEGMENT SUBASSEMBLY WELDMENT, ETMX H1, BOTTOM	2	001
9	D1003186	MANIFOLD CRYO BAFFLE SEGMENT SUBASSEMBLY WELDMENT, ETMX H1, RIGHT	2	001
10	D1003188	MANIFOLD-CRYO BAFFLE SEGMENT SUBASSEMBLY WELDMENT, ETMX H1, LEFT	2	001
11	D1003229	MANIFOLD -CRYO BAFFLE SEGMENT SUBASSEMBLY WELDMENT, ETMY H1, BOTTOM	2	001
12	D1003231	MANIFOLD CRYO BAFFLE SEGMENT SUBASSEMBLY WELDMENT, ETMY H1, RIGHT	2	001
13	D1003233	MANIFOLD-CRYO BAFFLE SEGMENT SUBASSEMBLY WELDMENT, ETMY H1, LEFT	2	001

5.3 Parts required for Assemblies - for REFERENCE ONLY

Item	Part Number	Description	Material	Total QTY	Starting Serial Number
14	D0902620	RADIAL SEGMENT, BOTTOM	18 GAUGE 304 SSTL	(4)	012
15	D0902621	MANIFOLD CRYO BAFFLE BRACKET	14 GAUGE 304 SSTL	(24)	037
16	D1000536	BAFFLE BRACE BRACKET	14 GAUGE 304 SSTL	(24)	037
17	D1000558	RADIAL SEGMENT, LEFT	18 GAUGE 304 SSTL	(2)	012
18	D1000559	RADIAL SEGMENT, RIGHT	18 GAUGE 304 SSTL	(2)	012
19	D1000570	MANIFOLD-CRYO BAFFLE CYLINDER	18 GAUGE 304 SSTL	(4)	012
20	D1001018	ELLIPSE SCRAPER BLADE	18 GAUGE 304 SSTL	(4)	012
21	D1001073	RADIAL ATTACHMENT NUT PLATE	14 GAUGE 304 SSTL	(12)	024
22	D1002849	WELDMENT BRACE	14 GAUGE 304 SSTL	(12)	024
23	D1003185	INNER SEGMENT, ETMX H1, BOTTOM	18 GAUGE 304 SSTL	(2)	012
24	D1003187	INNER SEGMENT WELDMENT, ETMX H1, RIGHT	18 GAUGE 304 SSTL	(2)	012
25	D1003191	INNER SEGMENT WELDMENT, ETMX H1, LEFT	18 GAUGE 304 SSTL	(2)	012
26	D1003230	INNER SEGMENT, ETMY H1, BOTTOM	18 GAUGE 304 SSTL	(2)	012
27	D1003232	INNER SEGMENT WELDMENT, ETMY H1, RIGHT	18 GAUGE 304 SSTL	(2)	012
28	D1003234	INNER SEGMENT WELDMENT, ETMY H1, LEFT	18 GAUGE 304 SSTL	(2)	012
29	D1201125	ETM X_Radial Segment Right	18 GAUGE 304 SSTL	(2)	001
30	D1201405	ETM Y_Radial Segment Left	18 GAUGE 304 SSTL	(2)	001

Note: **AQL = 1.0**, refer to Q1100003 for the AQL table, see link in Section 3.0.

6.0 Manufacturing

6.1 Requirements:

Suppliers must refer to the LIGO Specifications referenced in Section 3 for additional, and in some cases, non-industry standard requirements.

6.2 Sub-Contracted Work:

- LIGO expects that at least 2/3 (by dollar value) of the contracted work be performed by the Supplier named on the Purchase Order. The Supplier shall be responsible for all sub-contracted work.
- The Supplier's quote shall state their intent to sub-contract any welding operations performed on components intended for Vacuum use. If E0900048 is invoked in Section 3, then the component will be used in Vacuum.

6.3 Precedence:

The drawings typically represent the finished part as needed for use in service. There may be requirements on the drawing (such as coatings) which are specifically defined as not the responsibility of the supplier in this SOW. Suppliers shall always contact a LIGO representative to resolve any discrepancies uncertainties in the documentation or instructions.

6.4 Special Instructions:

- All parts shall be shipped as specified in Section 8.0. Shipping containers shall be supplied by the awarded vendor and constructed for multiple uses.
- Selected vendor shall purchase 18 gauge 304 Super #8 Stainless Steel material from approved LIGO supplier.
- Clean Rollers before forming parts. Cover with paper when forming.
- Do not remove PVC layer on 18 gauge 304 Stainless Steel materials. It is expected that PVC will be peeled back to allow for welding.
- Weld samples and Documentation are required per LIGO-E0900048.

6.5 Exclusions:

- Supplier is NOT responsible for cleaning except as specified in E0900364 above.
- Supplier is NOT responsible for the oxidation process.

7.0 End Item Data Package:

Before delivery of the parts, the Supplier shall provide the following data, as a minimum:

- Any as-built modifications (with approval of the LIGO Contracting Officer) as mark-ups to the drawings
- Material certifications
- Heat Treat and/or Stress Relief certifications, if applicable
- Electro-polish certifications, if applicable
- Pickle/Passivation certifications, if applicable

- Inspection reports of all dimensional features for the number of parts specified per the AQL number and referenced in the AQL table Q1100003 and any other inspection requirements detailed in Section 5 of this SOW
- Certificate of compliance for each part number stating conformance to contract and drawing requirements

8.0 Delivery Requirements:

8.1 Shipping Containers and Packaging:

The contractor is responsible for providing shipping containers and transportation which protects these parts from damage from the transportation environment (weather, handling, accidents, etc.). Mating edges of parts shall be especially protected from damage during shipping.

8.2 Shipping Destination(s):

The deliveries are FOB at these destinations, i.e. the Supplier has the responsibility for shipping title and control of goods until they are delivered and the transportation has been completed. The contractor selects the carrier and is responsible for the risk of transportation and for filing claims for loss or damage.

- Caltech will determine the ship to location at time of award.
- Shipping terms will be prepay and add.

8.3 Delivery Schedule:

Deliveries are to be completed as specified below. If this cannot be accommodated, please provide an alternative delivery schedule for consideration with your bid package. Early or partial deliveries are welcome.

- Requested delivery - 8 weeks ARO.

REV.	DATE	DCN #	DRAWING TREE #
v1	30 SEP 2010	E1000360	E1000085
v2	9 MAY 2011	E1000360-v2	-
v3	13 SEP 2011	E1000360-v3	-

NOTES CONTINUED:

(5) SCRIBE, ENGRAVE (A VIBRATORY TOOL MAY BE USED), LASER MARK (NO INKS OR DYES) DRAWING PART NUMBER, REVISION (AND VARIENT OR "TYPE" IF APPLICABLE) ON NOTED SURFACE OF PART FOLLOWED ON THE NEXT LINE WITH A THREE DIGIT SERIAL NUMBER. SERIAL NUMBERS START AT 001 FOR THE FIRST ARTICLE AND PROCEED CONSECUTIVELY. USE MINIMUM 0.12" HIGH CHARACTERS, UNLESS THE SIZE OF THE PART DICTATES SMALLER CHARACTERS.
EXAMPLE: DXXXXXXX-VY, TYPE-XX, S/N XXX
DO NOT APPLY MARK ON SUPER #8 SIDE

6. ALL PARTS SHALL BE MANUFACTURED IN ACCORDANCE WITH LIGO SPECIFICATION E0900364.

7. ALL MATERIAL IS TO BE VIRGIN MATERIAL (i.e. NO WELD REPAIRS, PLUGS OR RECYCLED MATERIAL). NO REPAIRS SHALL BE MADE UNLESS APPROVED IN ADVANCE, AND IN WRITING, BY LIGO LABORATORY. REFER TO LIGO-E0900364.

(8) SURFACE FINISH TO BE AS-PROCESSED FROM MILL/SUPPLIER, FREE FROM SCRATCHES OR GOUGES.

(9) SCRIBE, ENGRAVE (A VIBRATORY TOOL MAY BE USED), LASER MARK (NO INKS OR DYES) LETTERS AS SHOWN.
DO NOT APPLY MARK ON SUPER #8 SIDE

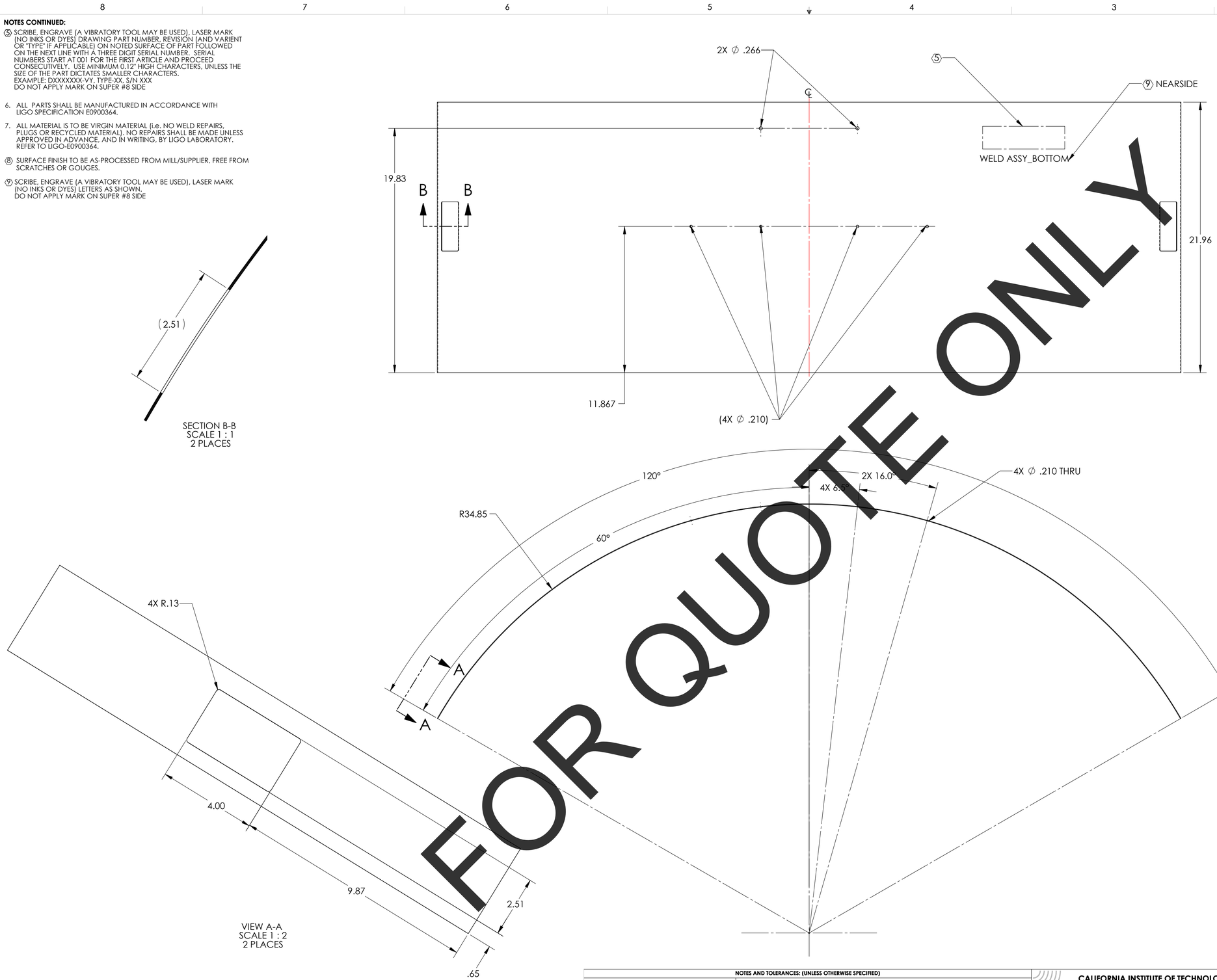

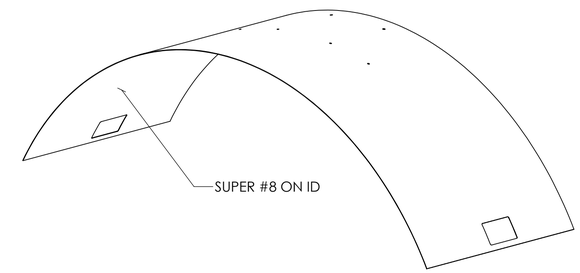

GENERAL VIEW
FOR REFERENCE ONLY
NO SCALE

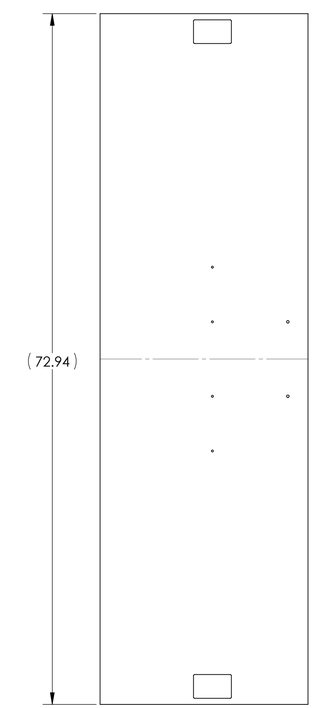

FLAT PATTERN

FOR QUOTE ONLY

NOTES AND TOLERANCES: (UNLESS OTHERWISE SPECIFIED)			
DIMENSIONS ARE IN INCHES TOLERANCES: .XX ± .03 .XXX ± .010 ANGULAR ± 0.1°	1. INTERPRET DRAWING PER ASME Y14.5-1994. 2. REMOVE ALL SHARP EDGES .005-.015 ON ALL EDGES AND HOLES. 3. DO NOT SCALE FROM DRAWING. 4. ALL MACHINING FLUIDS MUST BE FULLY SYNTHETIC, FULLY WATER SOLUBLE AND FREE OF SULFUR, SILICONE, AND CHLORINE.		
	MATERIAL 18 GAUGE 304 SSTL	FINISH (8) SUPER #8	

LIGO CALIFORNIA INSTITUTE OF TECHNOLOGY
MASSACHUSETTS INSTITUTE OF TECHNOLOGY

SYSTEM	SUB-SYSTEM
ADVANCED LIGO	AOS

NEXT ASSY: D0902655, D1003229, D1003184

PART NAME: RADIAL SEGMENT, BOTTOM

DESIGNER	H. Kelman	28 SEPT 2010	SIZE	DWG. NO.	REV.
DRAFTER	TQ. NGUYEN	16 AUG 2010	D	D0902620	v3
CHECKER	M. SMITH	27 JUL 2011			
APPROVAL	D. COYNE		SCALE: 1:4	PROJECTION:	SHEET 1 OF 1

D0902620 aLIGO_Manifold_Cryo_Baffle_Radial Segment Bottom, PART PDM REV-X-033, DRAWING PDM REV-X-028

REV.	DATE	DCN #	DRAWING TREE #
v1	17 MAR 2010	E1000360	E1000085-v1
v2	12 MAY 2011	E1000360-v2	E1000090-v1
v3	4 OCT 2011	E1000360-v3	E1000091-v1

NOTES CONTINUED:

(5) SCRIBE, ENGRAVE (A VIBRATORY TOOL MAY BE USED), LASER MARK OR MECHANICALLY STAMP (NO INKS OR DYES) DRAWING PART NUMBER, REVISION (AND VARIENT OR "TYPE" IF APPLICABLE) ON NOTED SURFACE OF PART FOLLOWED ON THE NEXT LINE WITH A THREE DIGIT SERIAL NUMBER. SERIAL NUMBERS START AT 001 FOR THE FIRST ARTICLE AND PROCEED CONSECUTIVELY. USE MINIMUM 0.12" HIGH CHARACTERS, UNLESS THE SIZE OF THE PART DICTATES SMALLER CHARACTERS.
EXAMPLE: DXXXXXXX-VY, TYPE-XX, S/N XXX

(6) CASTELLATION ON MATERIAL EDGES ARE FOR WELD PURPOSES IN ASSEMBLIES (D0902654, D0902655, D0902656).

7. DELETED

8. ALL PARTS SHALL BE MANUFACTURED IN ACCORDANCE WITH LIGO SPECIFICATION E0900364.

9. ALL MATERIAL IS TO BE VIRGIN MATERIAL (i.e. NO WELD REPAIRS, PLUGS OR RECYCLED MATERIAL). NO REPAIRS SHALL BE MADE UNLESS APPROVED IN ADVANCE, AND IN WRITING, BY LIGO LABORATORY. REFER TO LIGO-E0900364.

(10) SURFACE FINISH TO BE AS-PROCESSED FROM MILL/SUPPLIER, FREE FROM SCRATCHES OR GOUGES.

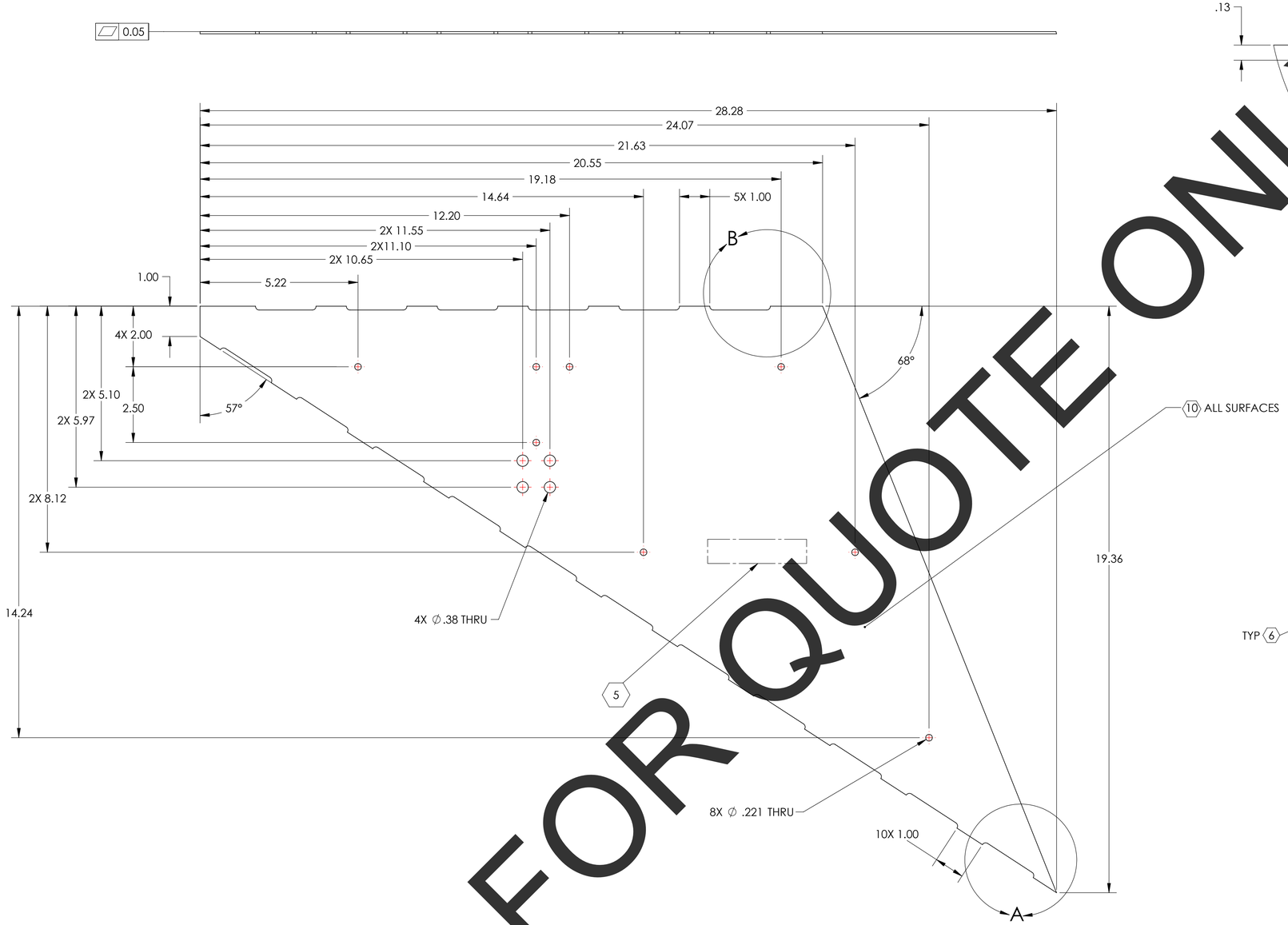

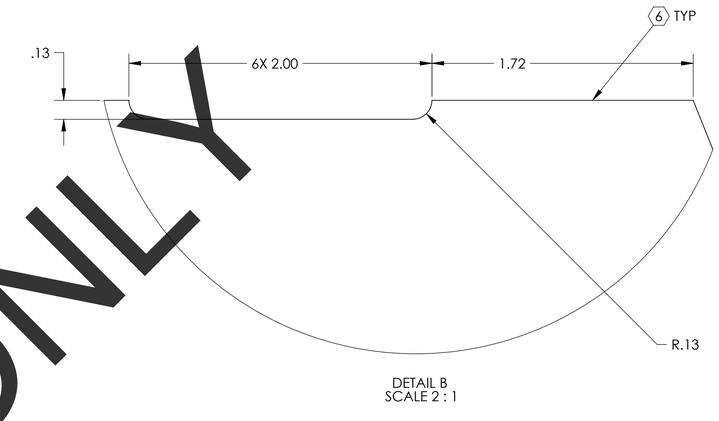

DETAIL B
SCALE 2 : 1

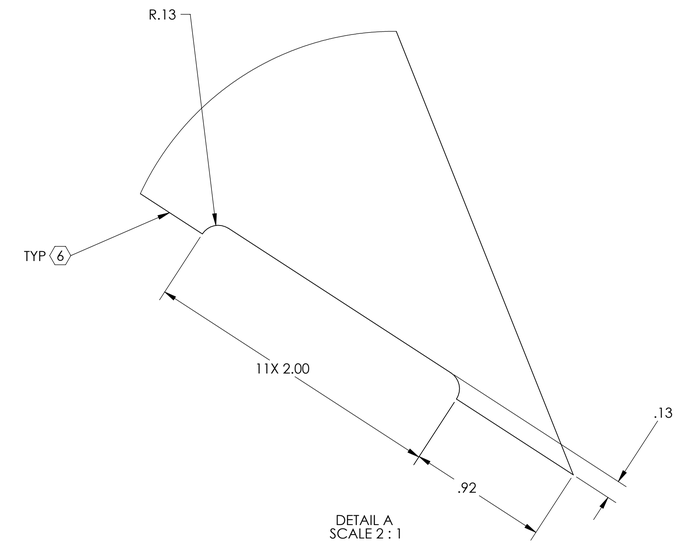

DETAIL A
SCALE 2 : 1

FOR QUOTE ONLY

THIS PIECE IS PART OF A WELDMENT. DIMENSIONS SHOWN ARE APPROXIMATE; WELD INDUCED SHRINKAGE OR FILL, AND POST WELD ANNEALING AND MACHINING CONSIDERATIONS ARE NOT INCLUDED. SEE NEXT ASSEMBLY FOR REQUIRED DIMENSIONS FOR STRUCTURE AFTER WELDING.

NOTES AND TOLERANCES: (UNLESS OTHERWISE SPECIFIED)

DIMENSIONS ARE IN INCHES

TOLERANCES:
.XX ± .06
.XXX ± .010

ANGULAR ± 1.0°

1. INTERPRET DRAWING PER ASME Y14.5-1994.
2. REMOVE ALL SHARP EDGES .005-.015 ON ALL EDGES AND HOLES.
3. DO NOT SCALE FROM DRAWING.
4. ALL MACHINING FLUIDS MUST BE FULLY SYNTHETIC, FULLY WATER SOLUBLE AND FREE OF SULFUR, SILICONE, AND CHLORINE.

MATERIAL: 14 GAUGE 304 SSTL
FINISH: (10)

LIGO — CALIFORNIA INSTITUTE OF TECHNOLOGY / MASSACHUSETTS INSTITUTE OF TECHNOLOGY

SYSTEM: ADVANCED LIGO
SUB-SYSTEM: AOS
NEXT ASSY: VARIOUS

PART NAME: MANIFOLD CRYO BAFFLE BRACKET

DESIGNER	H. KELMAN	17 MAR 2010
DRAFTER	TQ. NGUYEN	16 AUG 2010
CHECKER	M. SMITH	27 SEPT 2011
APPROVAL	D. COYNE	

SIZE: D
DWG. NO.: D0902621
REV.: v3
SCALE: 1:8
PROJECTION:
SHEET 1 OF 1

D0902621 on LIGO_Manifold_Cryo_Baffle_Bracket, PART FDM, REV: X-067, DRAWING FDM, REV: X-035

NOTES CONTINUED:

5 BAG AND TAG WITH DRAWING PART NUMBER AND REVISION FOLLOWED BY A THREE DIGIT SERIAL NUMBER. SERIAL NUMBERS START AT 001 FOR THE FIRST ARTICLE AND PROCEED CONSECUTIVELY. EXAMPLE: DXXXXXXX-VY, S/N 001.

6. ALL PARTS SHALL BE MANUFACTURED IN ACCORDANCE WITH LIGO SPECIFICATION E0900364.

⟨7⟩ SURFACE FINISH TO BE AS-PROCESSED FROM MILL/SUPPLIER, FREE FROM SCRATCHES OR GOUGES.

8. ALL MATERIAL IS TO BE VIRGIN MATERIAL (i.e. NO WELD REPAIRS, PLUGS OR RECYCLED MATERIAL). NO REPAIRS SHALL BE MADE UNLESS APPROVED IN ADVANCE, AND IN WRITING, BY LIGO LABORATORY. REFER TO LIGO-E0900364.

REV.	DATE	DCN #	DRAWING TREE #
v1	17 MAR 2010	E1000360	-
v2	12 MAY 2011	E1000360-v2	-
v3	13 SEP 2011	E1000360-v3	-

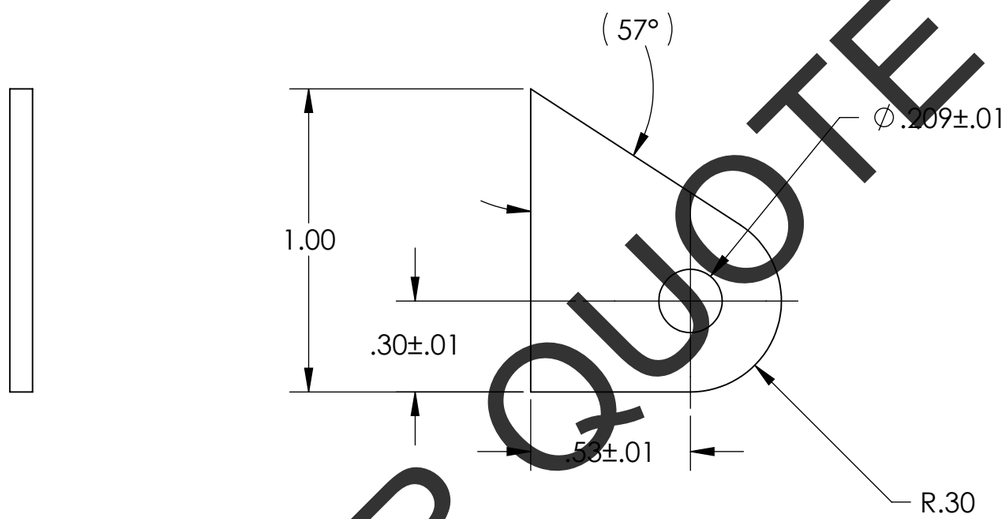

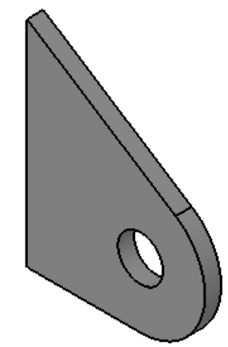

GENERAL VIEW
FOR REFERENCE ONLY
NO SCALE

FOR QUOTE ONLY

THIS PIECE IS PART OF A WELDMENT. DIMENSIONS SHOWN ARE APPROXIMATE; WELD INDUCED SHRINKAGE OR FILL, AND POST WELD ANNEALING AND MACHINING CONSIDERATIONS ARE NOT INCLUDED. SEE NEXT ASSEMBLY FOR REQUIRED DIMENSIONS FOR STRUCTURE AFTER WELDING.

NOTES AND TOLERANCES: (UNLESS OTHERWISE SPECIFIED)

DIMENSIONS ARE IN INCHES

TOLERANCES:
.XX ± .06
.XXX ± .010

ANGULAR ± 1.0°

1. INTERPRET DRAWING PER ASME Y14.5-1994.
2. REMOVE ALL SHARP EDGES, .005-.015 ON ALL EDGES AND HOLES.
3. DO NOT SCALE FROM DRAWING.
4. ALL MACHINING FLUIDS MUST BE FULLY SYNTHETIC, FULLY WATER SOLUBLE AND FREE OF SULFUR, SILICONE, AND CHLORINE.

MATERIAL 14 GAUGE 304 SSTL

FINISH ⟨7⟩

LIGO — CALIFORNIA INSTITUTE OF TECHNOLOGY
MASSACHUSETTS INSTITUTE OF TECHNOLOGY

SYSTEM ADVANCED LIGO

SUB-SYSTEM AOS

NEXT ASSY VARIOUS

PART NAME BAFFLE BRACE BRACKET

DESIGNER	H. Kelman	17 MAR 2010	SIZE B	DWG. NO. D1000536
DRAFTER	TQ. NGUYEN	18 AUG 2011		REV. v3
CHECKER	M. SMITH	27 SEP 2010		
APPROVAL	D. COYNE		SCALE: 2:1	PROJECTION: SHEET 1 OF 1

D1000536_aLIGO_Manifold_Cryo_Baffle_Brace_Brkt, PART PDM REV: X-036, DRAWING PDM REV: X-021

NOTES CONTINUED:

⑤ SCRIBE, ENGRAVE (A VIBRATORY TOOL MAY BE USED), LASER MARK (NO INKS OR DYES) DRAWING PART NUMBER, REVISION (AND VARIENT OR "TYPE" IF APPLICABLE) ON NOTED SURFACE OF PART FOLLOWED ON THE NEXT LINE WITH A THREE DIGIT SERIAL NUMBER. SERIAL NUMBERS START AT 001 FOR THE FIRST ARTICLE AND PROCEED CONSECUTIVELY. USE MINIMUM 0.12" HIGH CHARACTERS, UNLESS THE SIZE OF THE PART DICTATES SMALLER CHARACTERS.
EXAMPLE: DXXXXXXX-VY, TYPE-XX, S/N XXX
DO NOT APPLY MARK ON SUPER #8 SIDE

6. ALL PARTS SHALL BE MANUFACTURED IN ACCORDANCE WITH LIGO SPECIFICATION E0900364.

⑦ SURFACE FINISH TO BE AS-PROCESSED FROM MILL/SUPPLIER, FREE FROM SCRATCHES OR GOUGES.

⑧. SCRIBE, ENGRAVE (A VIBRATORY TOOL MAY BE USED), LASER MARK (NO INKS OR DYES) LETTERS AS SHOWN.

DO NOT APPLY MARK ON SUPER #8 SIDE

REV.	DATE	DCN #	DRAWING TREE #
v1	07 SEP 2010	E1000360	E1000090
v2	11 MAY 2011	E1000360-v2	-
v3	13 SEP 2011	E1000360-v3	-

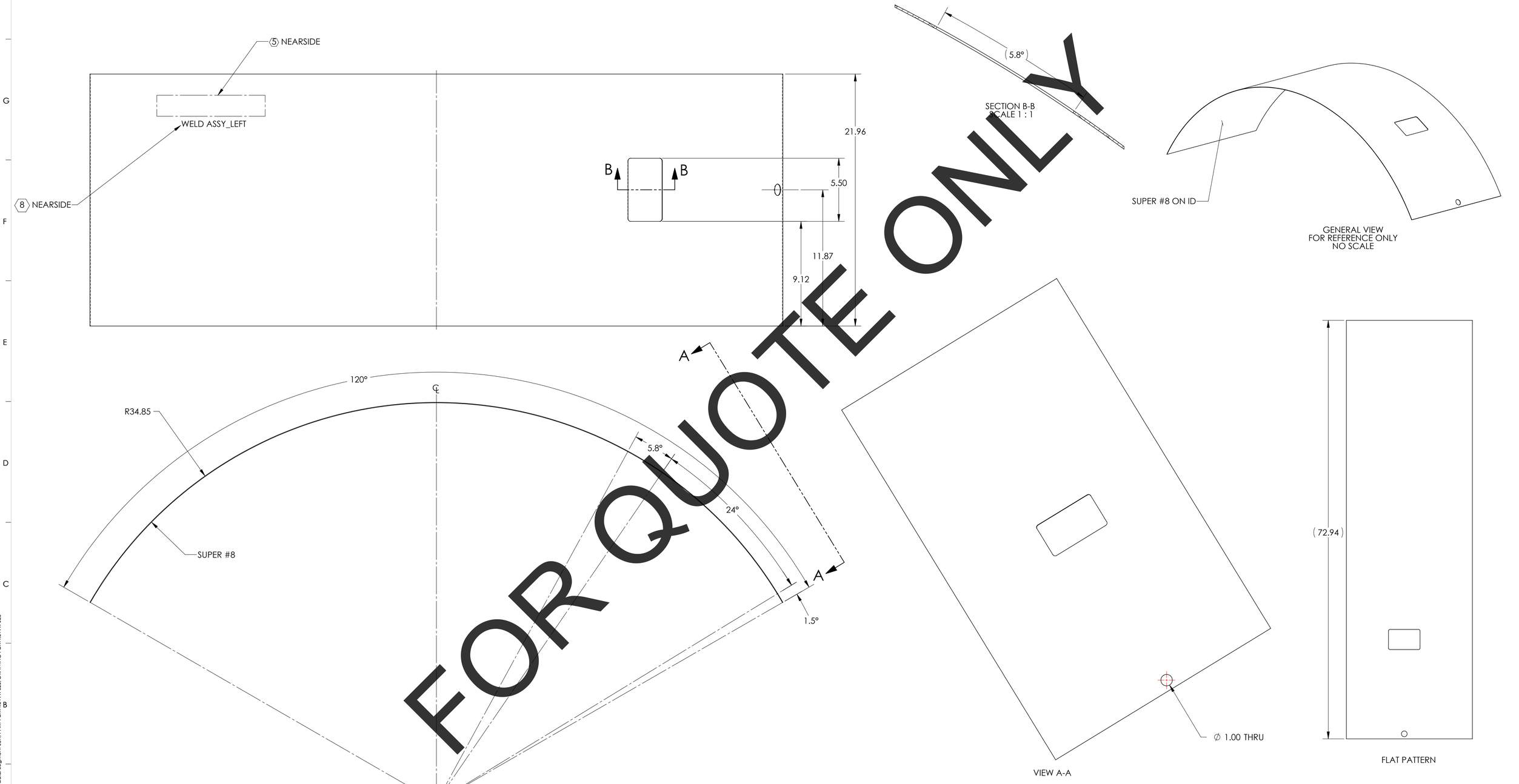

FOR QUOTE ONLY

NOTES AND TOLERANCES: (UNLESS OTHERWISE SPECIFIED)

DIMENSIONS ARE IN INCHES

TOLERANCES:
.XX ± .03
.XXX ± .010

ANGULAR ± 1.0°

1. INTERPRET DRAWING PER ASME Y14.5-1994.
2. REMOVE ALL SHARP EDGES .005-.015 ON ALL EDGES AND HOLES.
3. DO NOT SCALE FROM DRAWING.
4. ALL MACHINING FLUIDS MUST BE FULLY SYNTHETIC, FULLY WATER SOLUBLE AND FREE OF SULFUR, SILICONE, AND CHLORINE.

MATERIAL 18 GAUGE 304 SSTL

FINISH ⑦ SUPER #8

LIGO CALIFORNIA INSTITUTE OF TECHNOLOGY
MASSACHUSETTS INSTITUTE OF TECHNOLOGY

SYSTEM ADVANCED LIGO

SUB-SYSTEM AOS

NEXT ASSY D0902656 D1003188 D1003233

PART NAME RADIAL SEGMENT, LEFT

DESIGNER	H. KELMAN	17 MAR 2010
DRAFTER	TQ. NGUYEN	16 AUG 2010
CHECKER	M. SMITH	27 JUL 2012
APPROVAL	D. COYNE	

SIZE D **DWG. NO.** D1000558 **REV.** v3

SCALE: 1:4 **PROJECTION:** **SHEET** 1 OF 1

D1000558 ol/LIGO_Manifold_Cryo_Baffle_Radial Segment Left, PART PDM REV: X-025, DRAWING PDM REV: X-023

NOTES CONTINUED:

5. SCRIBE, ENGRAVE (A VIBRATORY TOOL MAY BE USED), LASER MARK (NO INKS OR DYES) DRAWING PART NUMBER, REVISION (AND VARIENT OR "TYPE" IF APPLICABLE) ON NOTED SURFACE OF PART FOLLOWED ON THE NEXT LINE WITH A THREE DIGIT SERIAL NUMBER. SERIAL NUMBERS START AT 001 FOR THE FIRST ARTICLE AND PROCEED CONSECUTIVELY. USE MINIMUM 0.12" HIGH CHARACTERS, UNLESS THE SIZE OF THE PART DICTATES SMALLER CHARACTERS.
EXAMPLE: DXXXXXX-VY, TYPE-XX, S/N XXX
DO NOT APPLY MARK ON SUPER #8 SIDE

6. ALL PARTS SHALL BE MANUFACTURED IN ACCORDANCE WITH LIGO SPECIFICATION E0900364.

7. SURFACE FINISH TO BE AS-PROCESSED FROM MILL/SUPPLIER, FREE FROM SCRATCHES OR GOUGES.

8 . ALL MATERIAL IS TO BE VIRGIN MATERIAL (i.e. NO WELD REPAIRS, PLUGS OR RECYCLED MATERIAL). NO REPAIRS SHALL BE MADE UNLESS APPROVED IN ADVANCE, AND IN WRITING, BY LIGO LABORATORY. REFER TO LIGO-E0900364.

9. SCRBIE, ENGRAVE (A VIBRATORY TOOL MAY BE USED), LASER MARK (NO INKS OR DYES) LETTERS AS SHOWN.

DO NOT APPLY MARK ON SUPER #8 SIDE.

REV.	DATE	DCN #	DRAWING TREE #
v1	3 SEPT 2010	E1000360	E1000090
v2	11 MAY 2011	E1000360-v2	-
v3	13 SEP 2011	E1000360-v3	-

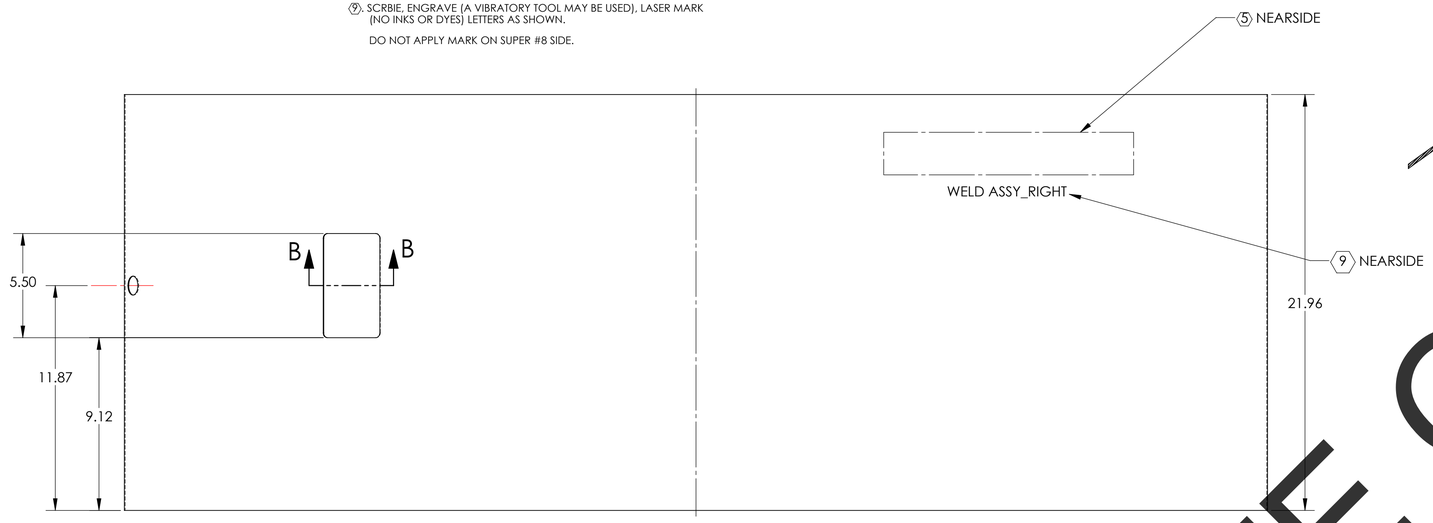

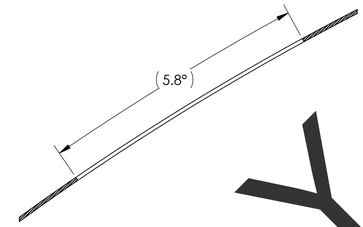

SECTION B-B
SCALE 1 : 1

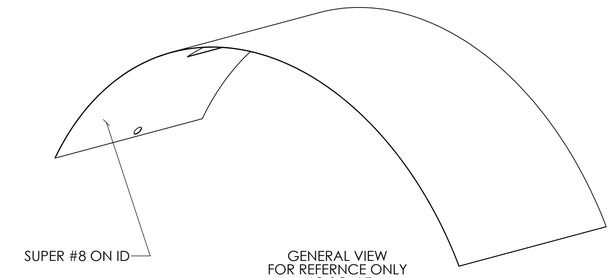

GENERAL VIEW
FOR REFERNCE ONLY
NO SCALE

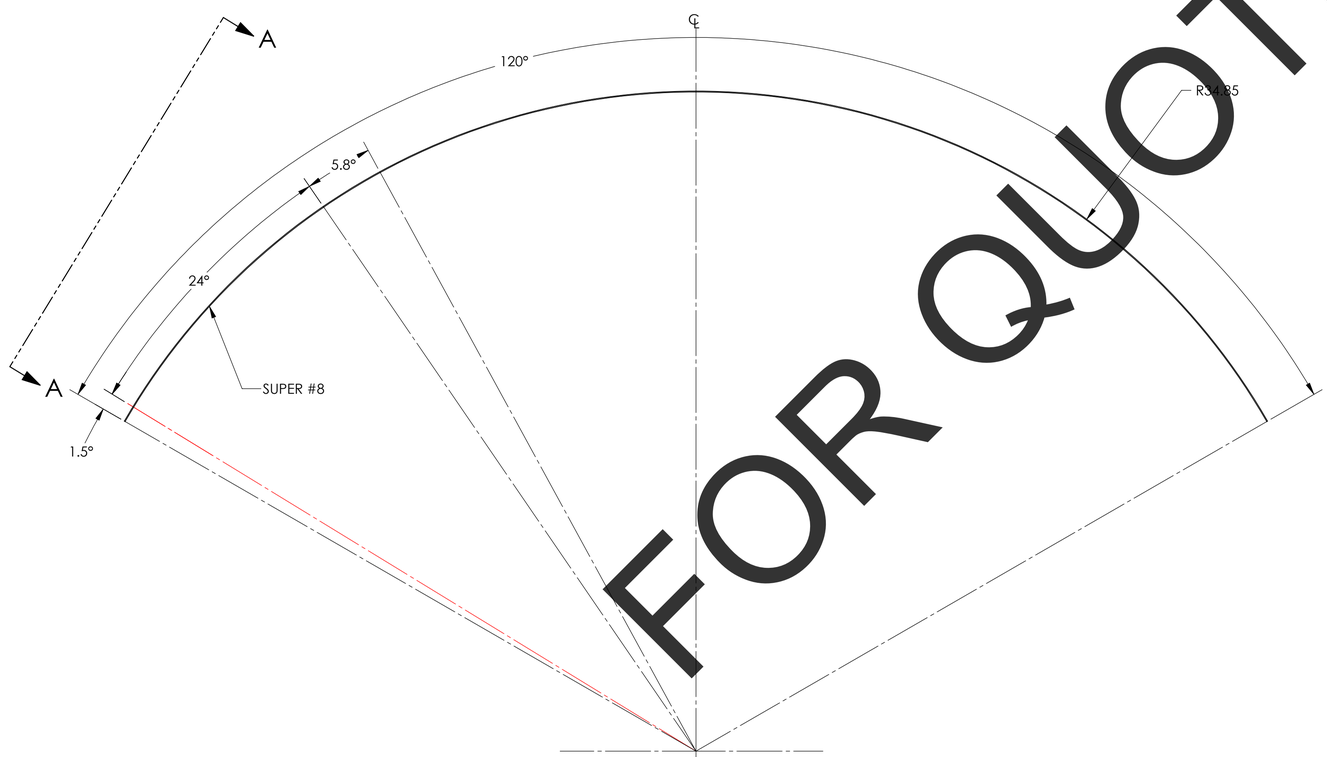

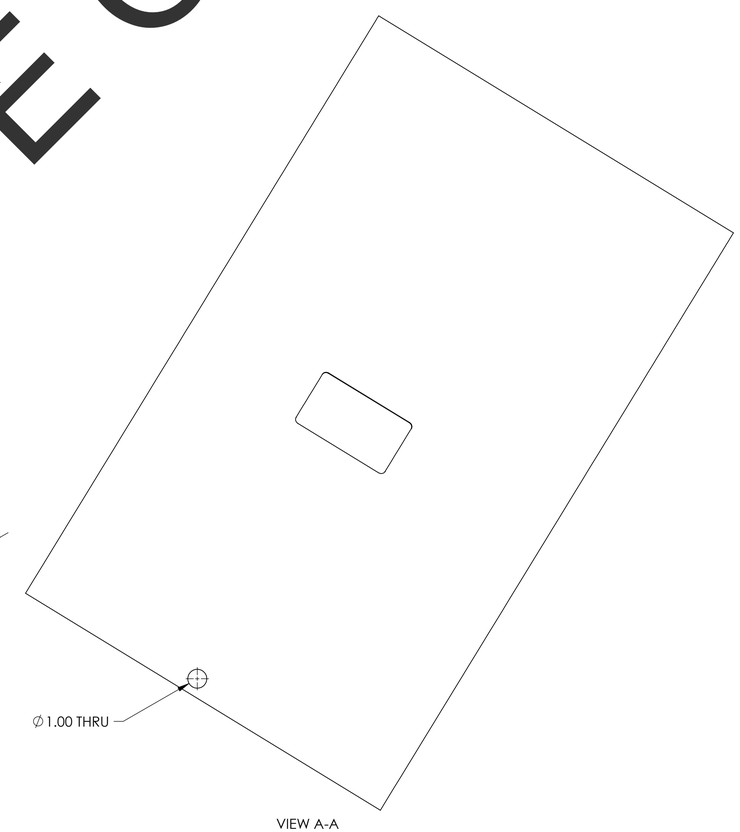

VIEW A-A

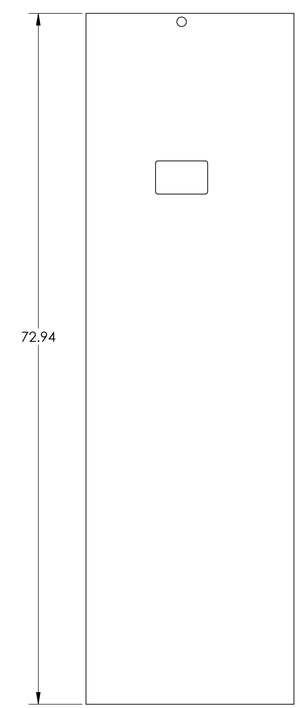

FLAT PATTERN

FOR QUOTE ONLY

DIMENSIONS ARE IN INCHES

TOLERANCES:
.XX ± .03
.XXX ± .010

ANGULAR ± 1.0°

NOTES AND TOLERANCES: (UNLESS OTHERWISE SPECIFIED)

1. INTERPRET DRAWING PER ASME Y14.5-1994.
2. REMOVE ALL SHARP EDGES .005-.015 ON ALL EDGES AND HOLES.
3. DO NOT SCALE FROM DRAWING.
4. ALL MACHINING FLUIDS MUST BE FULLY SYNTHETIC, FULLY WATER SOLUBLE AND FREE OF SULFUR, SILICONE, AND CHLORINE.

MATERIAL 18 GAUGE 304 SSTL

FINISH 7 SUPER #8

LIGO CALIFORNIA INSTITUTE OF TECHNOLOGY MASSACHUSETTS INSTITUTE OF TECHNOLOGY

SYSTEM ADVANCED LIGO

SUB-SYSTEM AOS

NEXT ASSY D0902654, D1003186, D1003231

PART NAME RADIAL SEGMENT, RIGHT

DESIGNER	H. KELMAN	17 MAR 2010	SIZE D	DWG. NO. D1000559
DRAFTER	TQ. NGUYEN	16 AUG 2010		REV. v3
CHECKER	M. SMITH	27 SEP 2010		
APPROVAL	D. COYNE		SCALE: 1:4	PROJECTION: SHEET 1 OF 1

D1000559 aLIGO_Manifold_Cryo_Baffle_Radial Segment Right, PART PDM REV: X-029, DRAWING PDM REV: X-025

NOTES CONTINUED:

5 SCRIBE, ENGRAVE (A VIBRATORY TOOL MAY BE USED), LASER MARK (NO INKS OR DYES) DRAWING PART NUMBER, REVISION (AND VARIENT OR "TYPE" IF APPLICABLE) ON NOTED SURFACE OF PART FOLLOWED ON THE NEXT LINE WITH A THREE DIGIT SERIAL NUMBER. SERIAL NUMBERS START AT 001 FOR THE FIRST ARTICLE AND PROCEED CONSECUTIVELY. USE MINIMUM 0.12" HIGH CHARACTERS, UNLESS THE SIZE OF THE PART DICTATES SMALLER CHARACTERS.
EXAMPLE: DXXXXXXX-VY, TYPE-XX, S/N XXX
DO NOT APPLY MARK ON SUPER #8 SIDE

⑥ FILLET WELD WHERE RING AND CYLINDER MAKE CONTACT. WELDING MUST BE PER SPECIFICATION E0900048

⑦ SURFACE FINISH TO BE AS-PROCESSED FROM MILL/SUPPLIER, FREE FROM SCRATCHES OR GOUGES.

⑧ SEAM WELD CYLINDER PER SPECIFICATION E0900048.

9. ALL PARTS SHALL BE MANUFACTURED IN ACCORDANCE WITH LIGO SPECIFICATION E0900364.

10. ALL MATERIAL IS TO BE VIRGIN MATERIAL (i.e. NO WELD REPAIRS, PLUGS OR RECYCLED MATERIAL). NO REPAIRS SHALL BE MADE UNLESS APPROVED IN ADVANCE, AND IN WRITING, BY LIGO LABORATORY. REFER TO LIGO-E0900364.

⑪ SCRIBE, ENGRAVE (A VIBRATORY TOOL MAY BE USED), LASER MARK (NO INKS OR DYES) LETTERS AS SHOWN.

⑫ VENDOR RESPONSIBLE FOR EDGE WELD PREP, IF REQUIRED.

REV.	DATE	DCN #	DRAWING TREE #
V1	07 SEP 2010	E1000360	E1000367
V2	11 MAY 2011	E1000360-v2	
V3	13 SEP 2011	E1000360-v3	

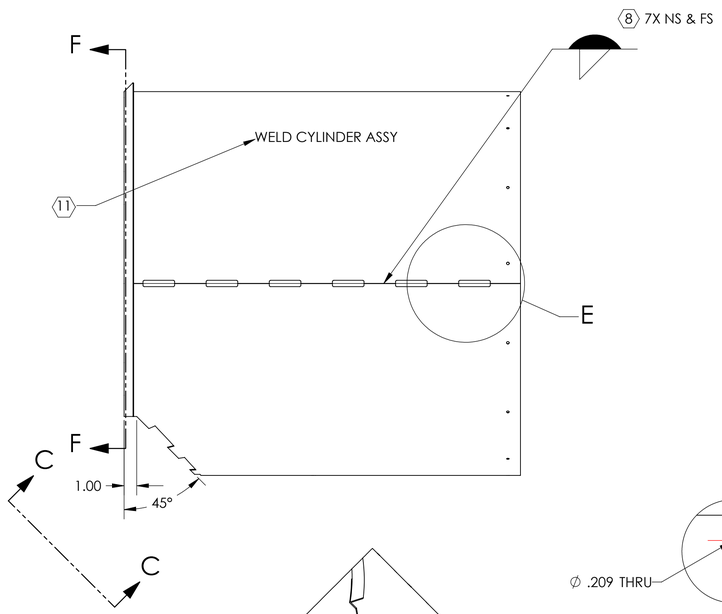

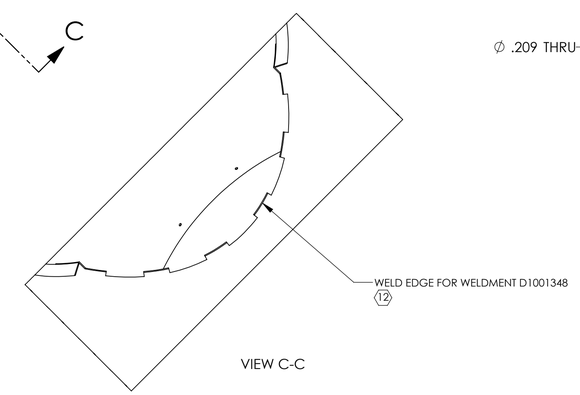

VIEW C-C

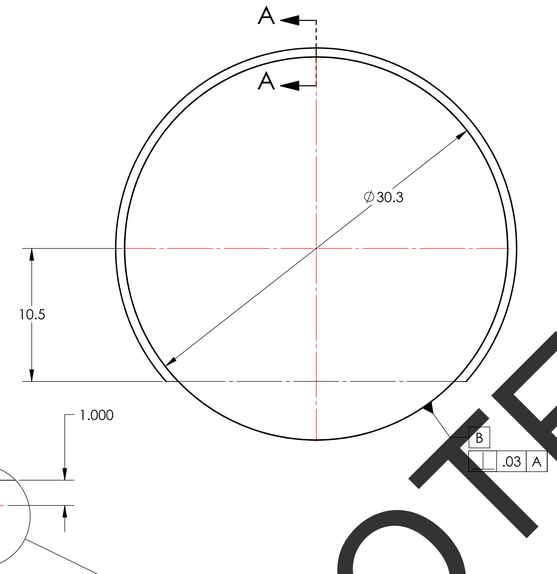

DETAIL D
SCALE 1 : 3
15X EQUAL SPACING

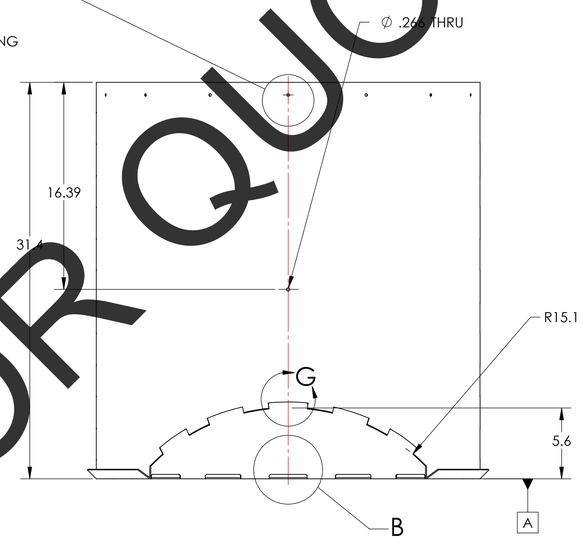

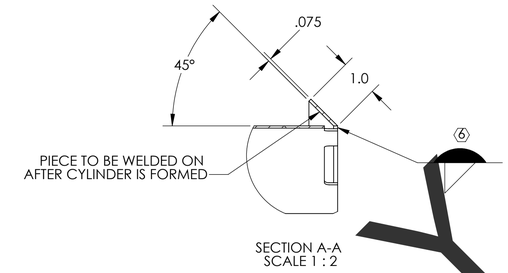

SECTION A-A
SCALE 1 : 2

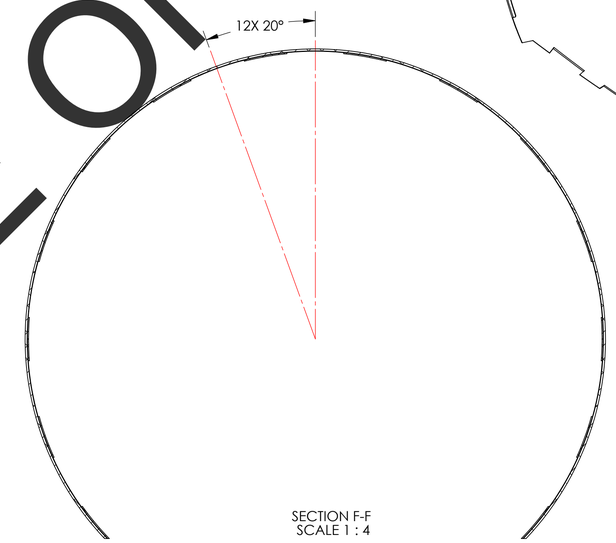

SECTION F-F
SCALE 1 : 4

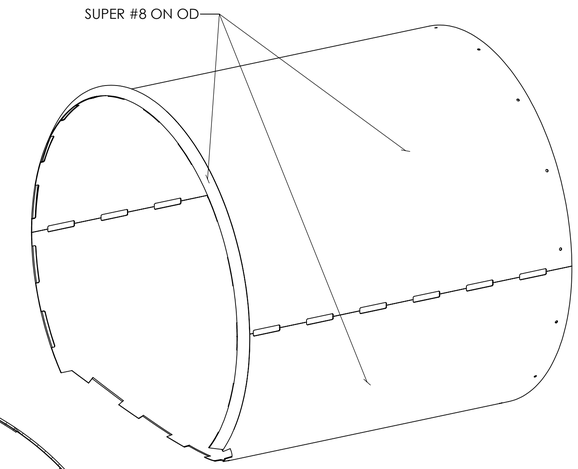

GENERAL VIEW
FOR REFERENCE ONLY
NO SCALE

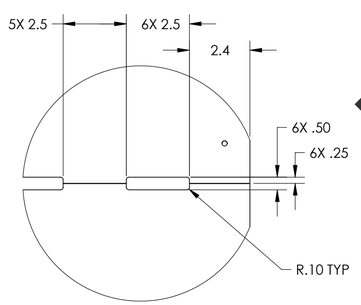

DETAIL E
SCALE 1 : 3
2X

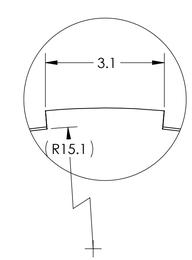

DETAIL G
SCALE 1 : 2
5X EQUALLY SPACED

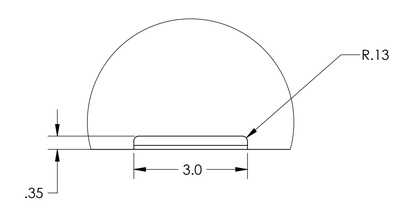

DETAIL B
SCALE 1 : 2
13X EQUALLY SPACED

THIS PIECE IS PART OF A WELDMENT. DIMENSIONS SHOWN ARE APPROXIMATE;
WELD INDUCED SHRINKAGE OR FILL, AND POST WELD
ANNEALING AND MACHINING CONSIDERATIONS ARE NOT INCLUDED.
SEE D0902654 FOR REQUIRED DIMENSIONS FOR STRUCTURE AFTER WELDMENT.

FOR QUOTE ONLY

NOTES AND TOLERANCES: (UNLESS OTHERWISE SPECIFIED)		
DIMENSIONS ARE IN INCHES TOLERANCES: .X ± .1 .XX ± .06 .XXX ± .010 ANGULAR ± 1.0°	1. INTERPRET DRAWING PER ASME Y14.5-1994. 2. REMOVE ALL SHARP EDGES, .005-.015 ON ALL EDGES AND HOLES. 3. DO NOT SCALE FROM DRAWING. 4. ALL MACHINING FLUIDS MUST BE FULLY SYNTHETIC, FULLY WATER SOLUBLE AND FREE OF SULFUR, SILICONE, AND CHLORINE.	
	MATERIAL: 18 GAUGE 304 SSTL	FINISH: ⑦ SUPER #8

LIGO — CALIFORNIA INSTITUTE OF TECHNOLOGY / MASSACHUSETTS INSTITUTE OF TECHNOLOGY

SYSTEM: ADVANCED LIGO — SUB-SYSTEM: AOS — NEXT ASSY: D1001348

PART NAME: MANIFOLD-CRYO BAFFLE CYLINDER

DESIGNER	H. KELMAN	5 APR 2010	SIZE: D	DWG. NO.: D1000570
DRAFTER	TQ. NGUYEN	07 SEP 2010		REV.: v3
CHECKER	M. SMITH	27 JUL 2012		
APPROVAL	D. COYNE		SCALE: 1:6	PROJECTION: SHEET 1 OF 1

D1000570_aLIGO_Manifold_Cryo_Baffle_Cylinder, PART FDM REV-X.039, DRAWING FDM REV-X.030

REV.	DATE	DCN #	DRAWING TREE #
v1	08 SEP 2010	E1000360	E1000367
v2	12 MAY 2011	E1000360-v2	-
v3	13 SEP 2011	E1000360-v3	-

NOTES CONTINUED:

⑤ SCRIBE, ENGRAVE (A VIBRATORY TOOL MAY BE USED), LASER MARK (NO INKS OR DYES) DRAWING PART NUMBER, REVISION (AND VARIENT OR "TYPE" IF APPLICABLE) ON NOTED SURFACE OF PART FOLLOWED ON THE NEXT LINE WITH A THREE DIGIT SERIAL NUMBER. SERIAL NUMBERS START AT 001 FOR THE FIRST ARTICLE AND PROCEED CONSECUTIVELY. USE MINIMUM 0.12" HIGH CHARACTERS, UNLESS THE SIZE OF THE PART DICTATES SMALLER CHARACTERS. EXAMPLE: DXXXXXX-VY, TYPE-XX, S/N XXX
DO NOT APPLY MARK ON SUPER #8 SIDE

⑥ SURFACE FINISH TO BE AS-PROCESSED FROM MILL/SUPPLIER, FREE FROM SCRATCHES OR GOUGES.

7. ALL PARTS SHALL BE MANUFACTURED IN ACCORDANCE WITH LIGO SPECIFICATION E0900364.

8. ALL MATERIAL IS TO BE VIRGIN MATERIAL (i.e. NO WELD REPAIRS, PLUGS OR RECYCLED MATERIAL). NO REPAIRS SHALL BE MADE UNLESS APPROVED IN ADVANCE, AND IN WRITING, BY LIGO LABORATORY. REFER TO LIGO-E0900364.

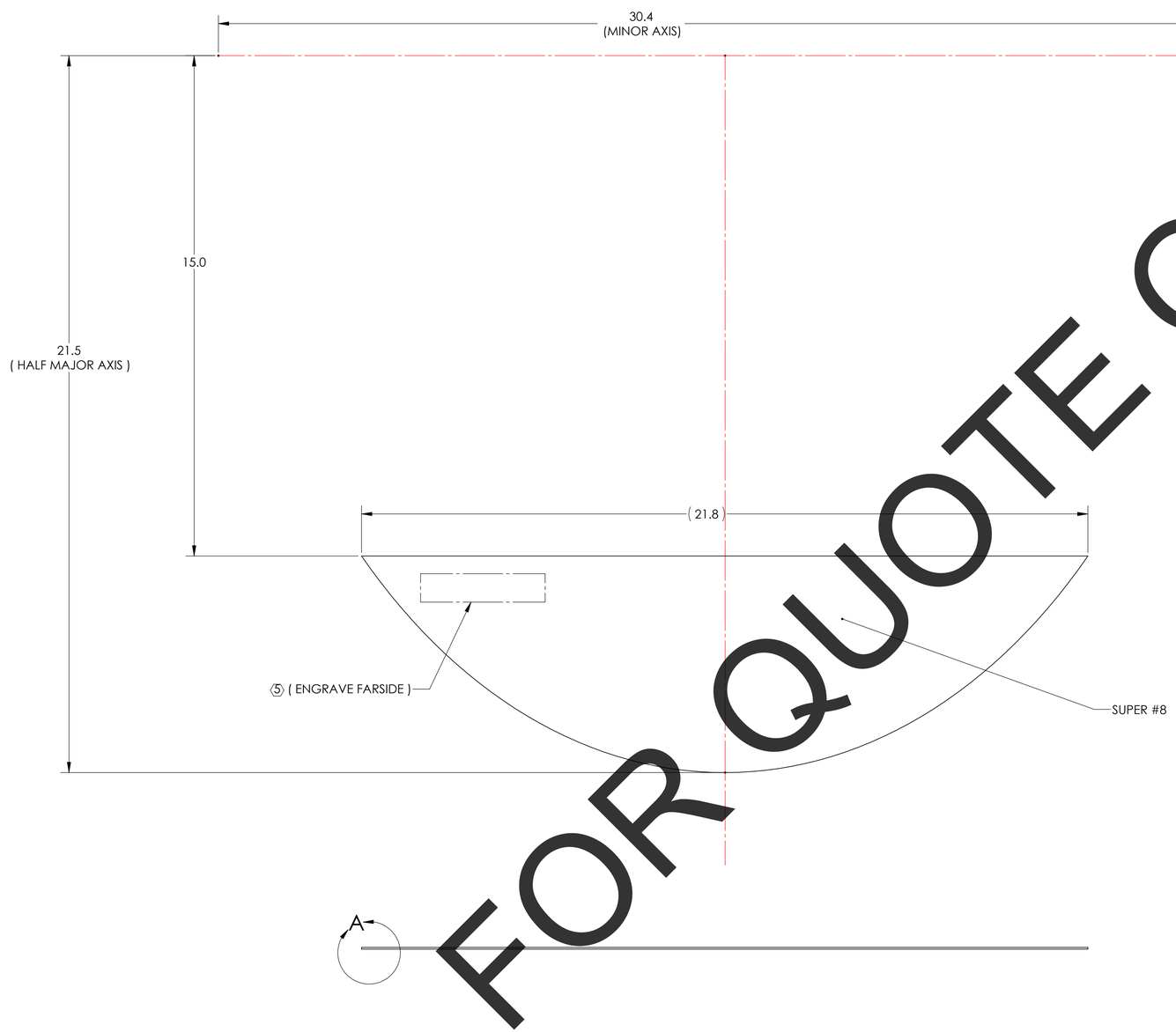

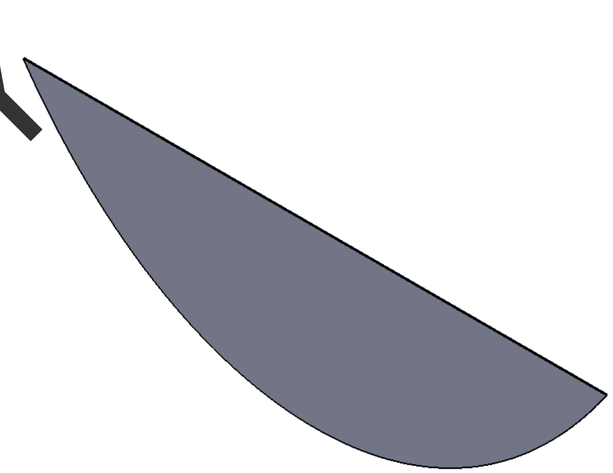

GENERAL VIEW
FOR REFERENCE ONLY
NO SCALE

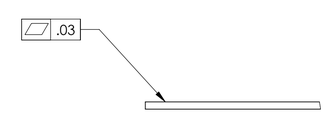

DETAIL A
SCALE 2 : 1

FOR QUOTE ONLY

THIS PIECE IS PART OF A WELDMENT. DIMENSIONS SHOWN ARE APPROXIMATE;
WELD INDUCED SHRINKAGE OR FILL, AND POST WELD
ANNEALING AND MACHINING CONSIDERATIONS ARE NOT INCLUDED.
SEE D1001348 FOR REQUIRED DIMENSIONS FOR STRUCTURE AFTER WELDMENT.

DIMENSIONS ARE IN INCHES

TOLERANCES:
.X ±.1
.XX ± .06
.XXX ± .010

ANGULAR ± 1.0°

NOTES AND TOLERANCES: (UNLESS OTHERWISE SPECIFIED)

1. INTERPRET DRAWING PER ASME Y14.5-1994.
2. REMOVE ALL SHARP EDGES .005-.015 FOR ALL EDGES AND HOLES.
3. DO NOT SCALE FROM DRAWING.
4. ALL MACHINING FLUIDS MUST BE FULLY SYNTHETIC, FULLY WATER SOLUBLE AND FREE OF SULFUR, SILICONE, AND CHLORINE.

MATERIAL 18 GAUGE 304 SSTL

FINISH ⑥ SUPER #8

LIGO CALIFORNIA INSTITUTE OF TECHNOLOGY
MASSACHUSETTS INSTITUTE OF TECHNOLOGY

SYSTEM ADVANCED LIGO

SUB-SYSTEM AOS

NEXT ASSY D1001348

PART NAME ELLIPSE SCRAPER BLADE

DESIGNER	H. KELMAN	15 JUN 2010	SIZE D	DWG. NO. D1001018 REV. v3
DRAFTER	TQ. NGUYEN	18 AUG 2010		
CHECKER	M. SMITH	27 SEPT 2010		
APPROVAL	D. COYNE		SCALE: 1:2	PROJECTION: SHEET 1 OF 1

D1001018_aLIGO_Manifold_Cryo_Baffle_Scraper_Blade, PART PDM REV: X-023, DRAWING PDM REV: X-019

REV.	DATE	DCN #	DRAWING TREE #
v1	08 SEP 2010	E1000360	E1000085
v2	12 MAY 2011	E1000360-v2	E1000090
v3	12 SEP 2011	E1000360-v3	E1000091

NOTES CONTINUED:

⑤ SCRIBE, ENGRAVE (A VIBRATORY TOOL MAY BE USED), LASER MARK (NO INKS OR DYES) DRAWING PART NUMBER, REVISION (AND VARIENT OR "TYPE" IF APPLICABLE) ON NOTED SURFACE OF PART FOLLOWED ON THE NEXT LINE WITH A THREE DIGIT SERIAL NUMBER. SERIAL NUMBERS START AT 001 FOR THE FIRST ARTICLE AND PROCEED CONSECUTIVELY. USE MINIMUM 0.12" HIGH CHARACTERS, UNLESS THE SIZE OF THE PART DICTATES SMALLER CHARACTERS.
EXAMPLE: DXXXXXXX-VY, TYPE-XX, S/N XXX
DO NOT APPLY MARK ON SUPER #8 SIDE

6. ALL PARTS SHALL BE MANUFACTURED IN ACCORDANCE WITH LIGO SPECIFICATION E0900364.

7. ALL MATERIAL IS TO BE VIRGIN MATERIAL (i.e. NO WELD REPAIRS, PLUGS OR RECYCLED MATERIAL). NO REPAIRS SHALL BE MADE UNLESS APPROVED IN ADVANCE, AND IN WRITING, BY LIGO LABORATORY. REFER TO LIGO-E0900364.

⑧ SURFACE FINISH TO BE AS-PROCESSED FROM MILL/SUPPLIER, FREE FROM SCRATCHES OR GOUGES.

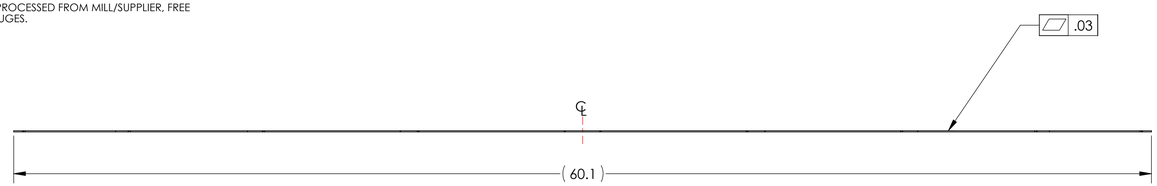

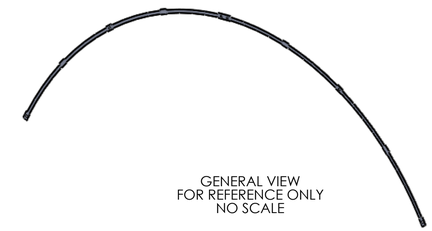

GENERAL VIEW
FOR REFERENCE ONLY
NO SCALE

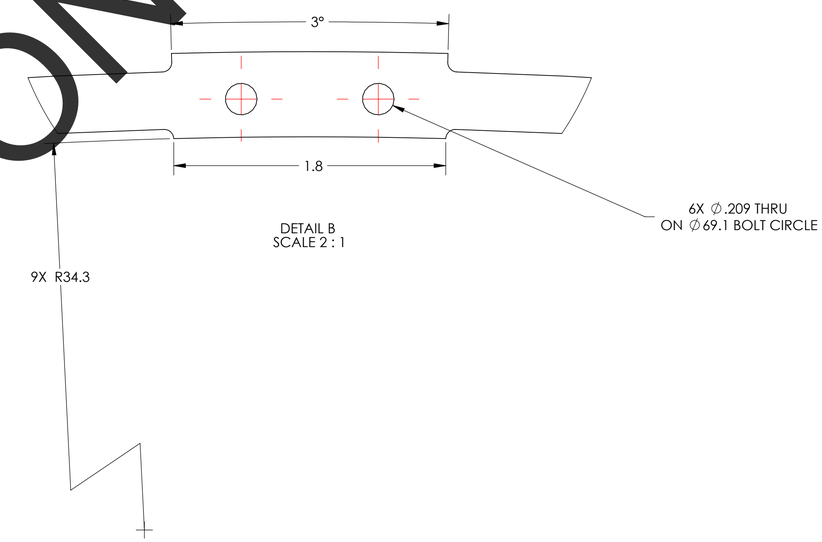

DETAIL B
SCALE 2 : 1

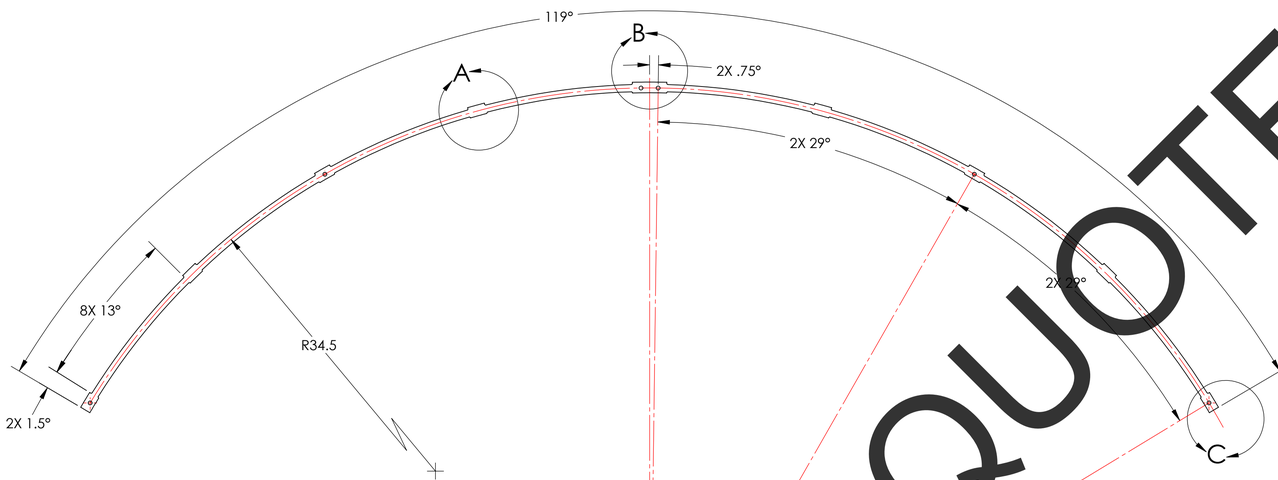

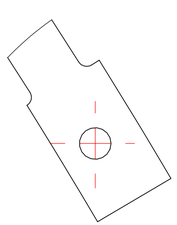

DETAIL C
SCALE 2 : 1
2X

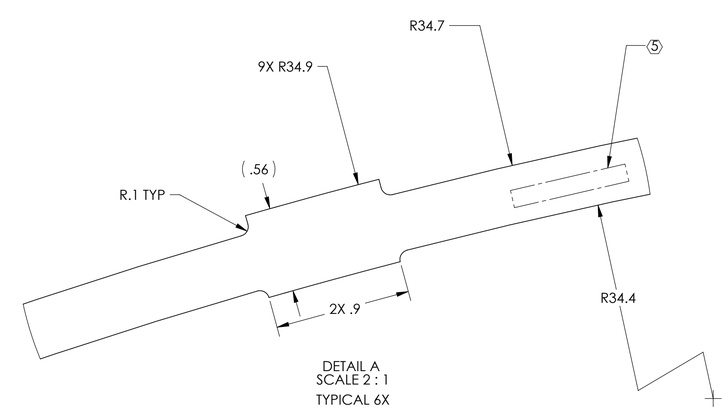

DETAIL A
SCALE 2 : 1
TYPICAL 6X

FOR QUOTE ONLY

THIS PIECE IS PART OF A WELDMENT. DIMENSIONS SHOWN ARE APPROXIMATE;
WELD INDUCED SHRINKAGE OR FILL, AND POST WELD ANNEALING AND
MACHINING CONSIDERATIONS ARE NOT INCLUDED.
SEE NEXT ASSEMBLY FOR REQUIRED DIMENSIONS FOR STRUCTURE AFTER WELDMENT.

DIMENSIONS ARE IN INCHES

TOLERANCES:
.X ± .1
.XX ± .06
.XXX ± .010

ANGULAR ± 1.0°

NOTES AND TOLERANCES: (UNLESS OTHERWISE SPECIFIED)

1. INTERPRET DRAWING PER ASME Y14.5-1994.
2. REMOVE ALL SHARP EDGES .005-.015 ON ALL EDGES AND HOLES.
3. DO NOT SCALE FROM DRAWING.
4. ALL MACHINING FLUIDS MUST BE FULLY SYNTHETIC, FULLY WATER SOLUBLE AND FREE OF SULFUR, SILICONE, AND CHLORINE.

MATERIAL 14 GAUGE 304 SSTL

FINISH ⑧

LIGO CALIFORNIA INSTITUTE OF TECHNOLOGY
MASSACHUSETTS INSTITUTE OF TECHNOLOGY

SYSTEM ADVANCED LIGO

SUB-SYSTEM AOS

NEXT ASSY VARIOUS

PART NAME RADIAL ATTACHMENT NUT PLATE

DESIGNER	H. KELMAN	6 APRIL 2010	SIZE	DWG. NO.	REV.
DRAFTER	TQ. NGUYEN	17 AUG 2010	D	D1001073	v3
CHECKER	M. SMITH	27 SEP 2011			
APPROVAL	D. COYNE		SCALE: 1:4	PROJECTION:	SHEET 1 OF 1

D1001073_aLIGO_Weld_Nut_Plate, PART FDM REV: X-025, DRAWING FDM REV: X-019

NOTES CONTINUED:

(5) DELETED.

6. ASSEMBLY TO BE OXIDIZED AFTER WELDMENT IS COMPLETED PER SPECIFICATION E1100842.

(7) FILLET WELD WHERE ITEMS (1) & (3) AND (3) & (2) MAKE CONTACT. WELDING MUST BE PER SPECIFICATION E0900048.

REV.	DATE	DCN #	DRAWING TREE #
v1	20 MAY 2010	E1000360	E1000367
v2	11 MAY 2011	E1000360-v2	-
v3	3 OCT 2011	E1000360-v3	-

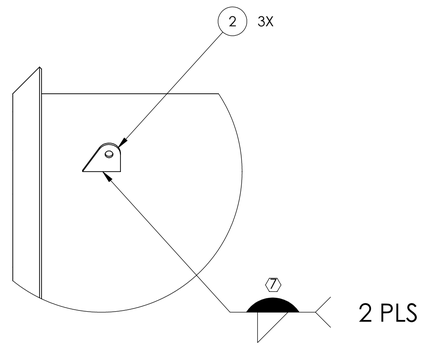

DETAIL B
SCALE 1 : 2

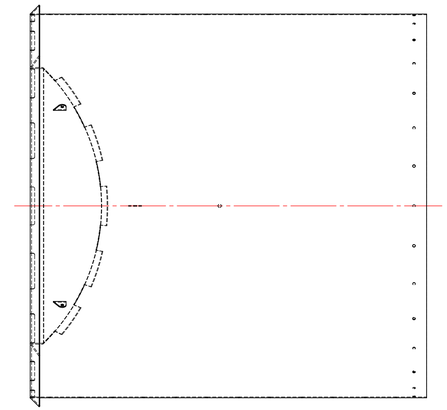

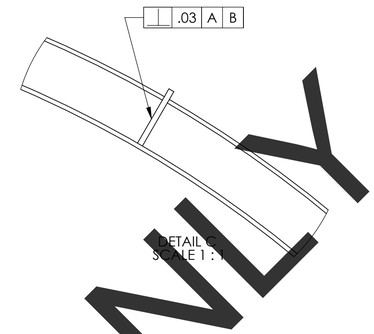

DETAIL C
SCALE 1 : 1

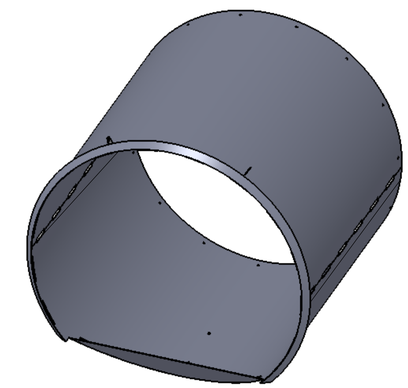

GENERAL VIEW
FOR REFERENCE ONLY
NO SCALE

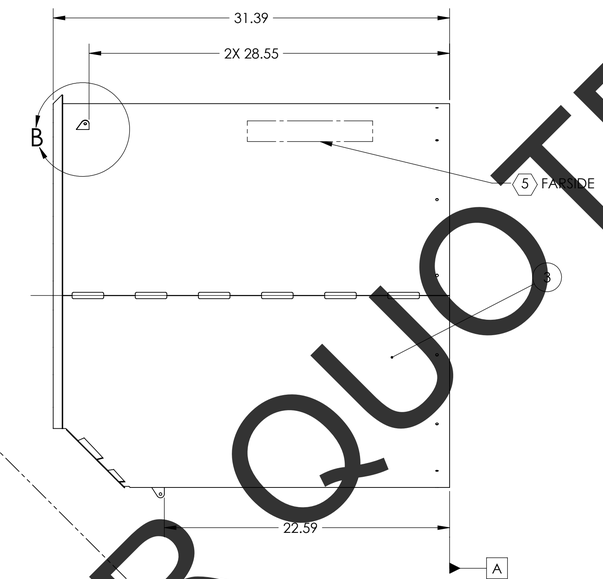

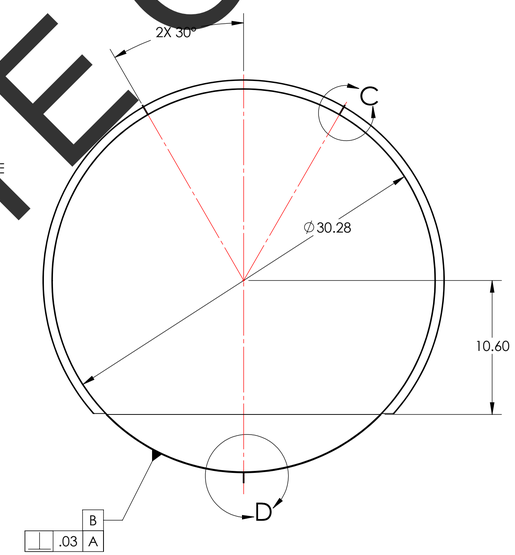

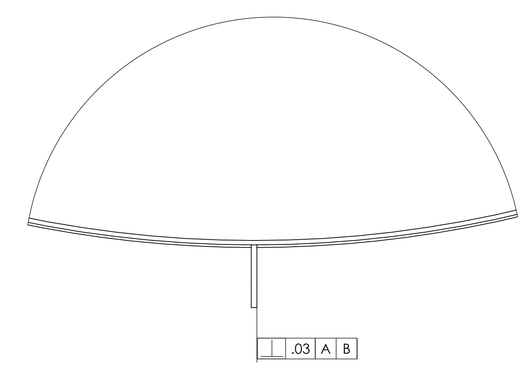

DETAIL D
SCALE 1 : 1

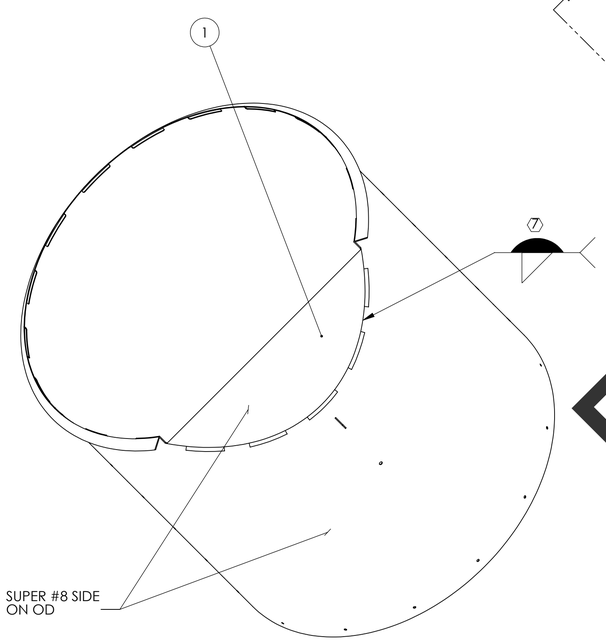

VIEW A-A

FOR QUOTE ONLY

ITEM NO.	PART NUMBER	DESCRIPTION	MATERIAL	REQ	SPARE	TOTAL
3	D1000570	MANIFOLD-CRYO BAFFLE CYLINDER	18 GAUGE 304 SSTL	1		1
2	D1000536	BAFFLE BRACE BRACKET	14 GAUGE 304 SSTL	3		3
1	D1001018	ELLIPSE SCRAPER BLADE	18 GAUGE 304 SSTL	1		1

PARTS LIST

NOTES AND TOLERANCES: (UNLESS OTHERWISE SPECIFIED)

DIMENSIONS ARE IN INCHES

TOLERANCES:
.X ± .1
.XX ± .06
.XXX ± .010

ANGULAR ± 1.0°

1. INTERPRET DRAWING PER ASME Y14.5-1994.
2. REMOVE ALL SHARP EDGES .005-.015 ON ALL EDGES AND HOLES.
3. DO NOT SCALE FROM DRAWING.
4. ALL MACHINING FLUIDS MUST BE FULLY SYNTHETIC, FULLY WATER SOLUBLE AND FREE OF SULFUR, SILICONE, AND CHLORINE.

MATERIAL: N/A
FINISH: N/A

LIGO — CALIFORNIA INSTITUTE OF TECHNOLOGY / MASSACHUSETTS INSTITUTE OF TECHNOLOGY

SYSTEM: ADVANCED LIGO
SUB-SYSTEM: AOS
NEXT ASSY: D1101398, D1003183, D1003221

PART NAME: MANIFOLD-CRYO BAFFLE CYLINDER-SCRAPER ASSEMBLY

DESIGNER	H. KELMAN	25 MAY 2010
DRAFTER	TQ. NGUYEN	07 SEP 2010
CHECKER	M. SMITH	27 JUL 2011
APPROVAL	D. COYNE	

SIZE: D
DWG. NO.: D1001348
REV.: v3
SCALE: 1:6
PROJECTION:
SHEET 1 OF 1

D1001348_aLIGO_Manifold_Cryo_Baffle_Cyl_Scraper_Assy ; PART FIDM REV:-X-045, DRAWING FIDM REV:-X-029

REV.	DATE	DCN #	DRAWING TREE #
v1	2 OCT 2010	E1000360	E1000085-v1
v2	12 MAY 2011	E1000360-v2	E1000090-v1
v3	4 OCT 2011	E1000360-v3	E1000091-v1

NOTES CONTINUED:

⑤ SCRIBE, ENGRAVE (A VIBRATORY TOOL MAY BE USED), LASER MARK OR MECHANICALLY STAMP (NO INKS OR DYES) DRAWING PART NUMBER, REVISION (AND VARIANT OR "TYPE" IF APPLICABLE) ON NOTED SURFACE OF PART FOLLOWED ON THE NEXT LINE WITH A THREE DIGIT SERIAL NUMBER. SERIAL NUMBERS START AT 001 FOR THE FIRST ARTICLE AND PROCEED CONSECUTIVELY. USE MINIMUM 0.12" HIGH CHARACTERS, UNLESS THE SIZE OF THE PART DICTATES SMALLER CHARACTERS.
EXAMPLE: DXXXXXXX-VY, TYPE-XX, S/N XXX

6. ALL MATERIAL IS TO BE VIRGIN MATERIAL (i.e. NO WELD REPAIRS, PLUGS OR RECYCLED MATERIAL). NO REPAIRS SHALL BE MADE UNLESS APPROVED IN ADVANCE, AND IN WRITING, BY LIGO LABORATORY. REFER TO LIGO-E0900364.

7. ALL PARTS SHALL BE MANUFACTURED IN ACCORDANCE WITH LIGO SPECIFICATION E0900364 AND E1100842.

⑧ SURFACE FINISH TO BE AS-PROCESSED FROM MILL/SUPPLIER, FREE FROM SCRATCHES OR GOUGES.

⑨ CASTELLATION ON MATERIAL EDGES ARE FOR WELD PURPOSES IN ASSEMBLIES (D0902654, D0902655, D0902656).

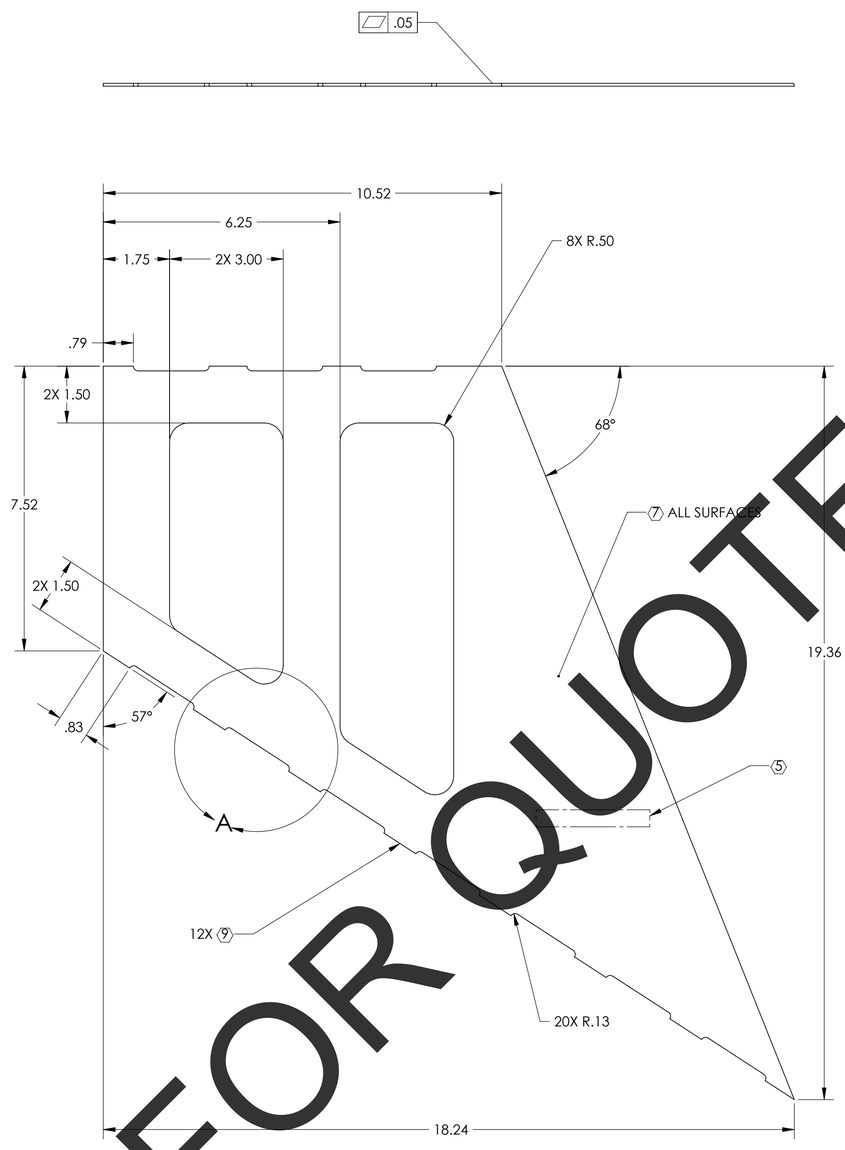

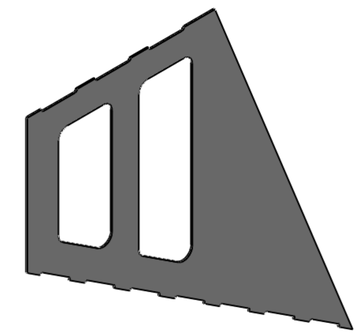

GENERAL VIEW
FOR REFERENCE ONLY
NO SCALE

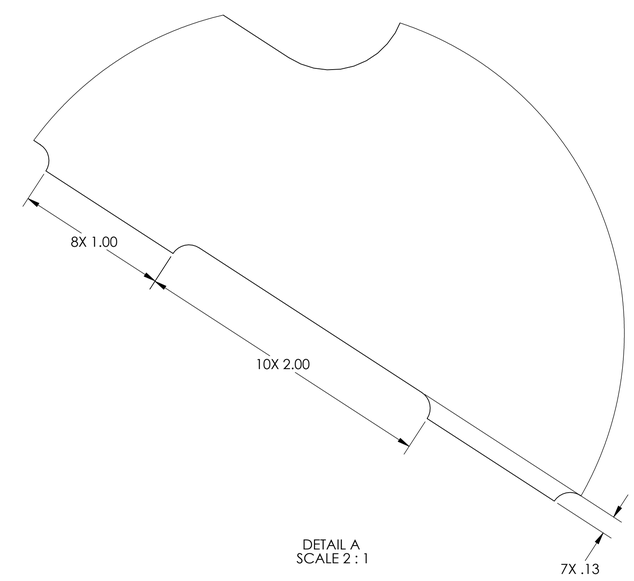

DETAIL A
SCALE 2 : 1

FOR QUOTE ONLY

THIS PIECE IS PART OF A WELDMENT. DIMENSIONS SHOWN ARE APPROXIMATE; WELD INDUCED SHRINKAGE OR FILL AND POST WELD ANNEALING AND MACHINING CONSIDERATIONS ARE NOT INCLUDED.
SEE NEXT ASSMEBLE FOR REQUIRED DIMENDIONS FOR STRUCTURE AFTER WELDING.

NOTES AND TOLERANCES: (UNLESS OTHERWISE SPECIFIED)

DIMENSIONS ARE IN INCHES

TOLERANCES:
.XX ± .06
.XXX ± .010

ANGULAR ± 1.0°

1. INTERPRET DRAWING PER ASME Y14.5-1994.
2. REMOVE ALL SHARP EDGES .005-.015 ON ALL EDGES AND HOLES.
3. DO NOT SCALE FROM DRAWING.
4. ALL MACHINING FLUIDS MUST BE FULLY SYNTHETIC, FULLY WATER SOLUBLE AND FREE OF SULFUR, SILICONE, AND CHLORINE.

MATERIAL: 14 GAUGE 304 SSTL
FINISH: ⑧

LIGO — CALIFORNIA INSTITUTE OF TECHNOLOGY / MASSACHUSETTS INSTITUTE OF TECHNOLOGY

SYSTEM: ADVANCED LIGO
SUB-SYSTEM: AOS
NEXT ASSY: VARIOUS

PART NAME: MANIFOLD CRYO BAFFLE WELDMENT BRACE

DESIGNER	H. KELMAN	27 OCT 2010	SIZE	DWG. NO.	REV.
DRAFTER	TQ. NGUYEN	2 OCT 2010	D	D1002849	v3
CHECKER	M. SMITH	27 SEP 2011			
APPROVAL	D. COYNE		SCALE: 1:2	PROJECTION:	SHEET 1 OF 1

D1002849 ol/LIGO_Manifold_Cryo_Baffle_Weldment_Brace, PART FDM REV-X.024, DRAWING FDM REV-X.016

NOTES CONTINUED:

⑤ SCRIBE, ENGRAVE (A VIBRATORY TOOL MAY BE USED), LASER MARK (NO INKS OR DYES) DRAWING PART NUMBER, REVISION (AND VARIENT OR "TYPE" IF APPLICABLE) ON NOTED SURFACE OF PART FOLLOWED ON THE NEXT LINE WITH A THREE DIGIT SERIAL NUMBER. SERIAL NUMBERS START AT 001 FOR THE FIRST ARTICLE AND PROCEED CONSECUTIVELY. USE MINIMUM 0.12" HIGH CHARACTERS, UNLESS THE SIZE OF THE PART DICTATES SMALLER CHARACTERS.
EXAMPLE: DXXXXXXX-VY, TYPE-XX, S/N XXX
DO NOT APPLY MARK ON SUPER #8 SIDE

6. ASSEMBLY TO BE OXIDIZED AFTER WELDMENT IS COMPLETED PER SPECIFICATION E1100842.

⑦ FILLET WELDS WHERE ITEMS ① & ③, ① & ⑤, ② & ③, ① & ④ MAKE CONTACT. WELDING MUST BE PER SPECIFICTION E0900048

REV.	DATE	DCN #	DRAWING TREE #
v1	26 OCT 2010	E1000360-v2	E1000085
v2	20 OCT 2011	E1000360-v3	-
-	-	-	-

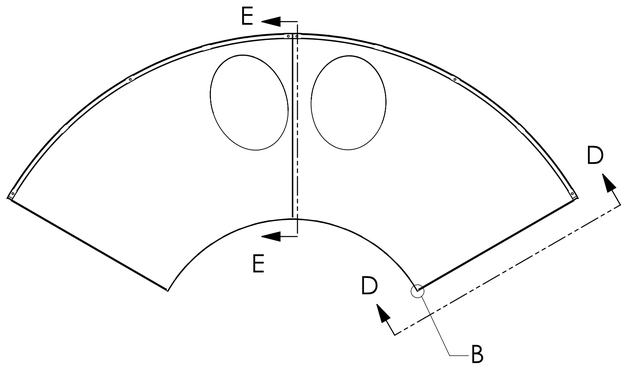

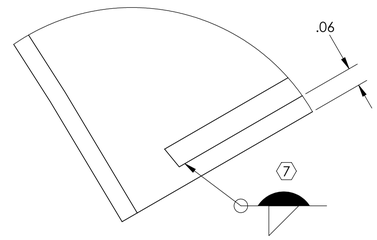

DETAIL B
SCALE 4 : 1

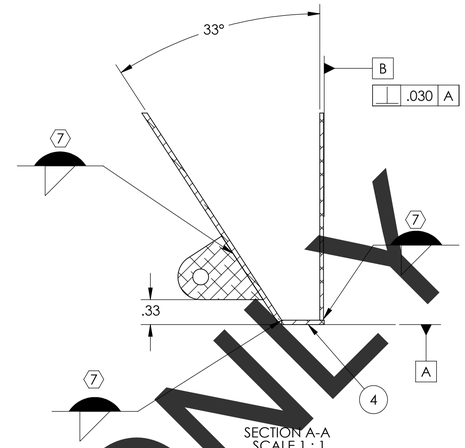

SECTION A-A
SCALE 1 : 1

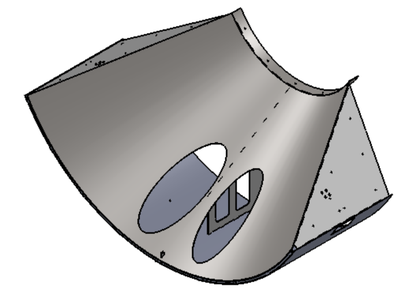

GENERAL VIEW
FOR REFERENCE ONLY
NO SCALE

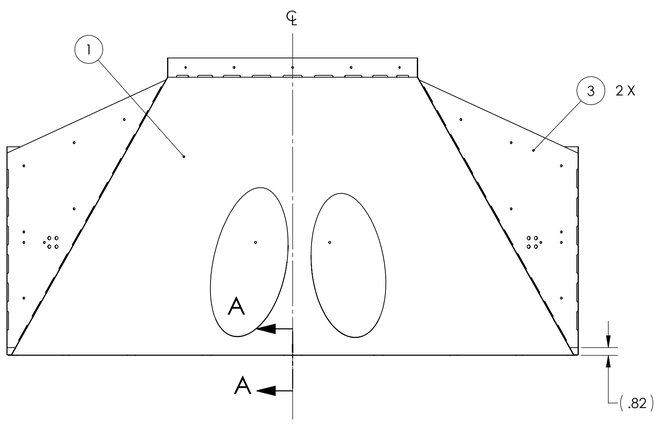

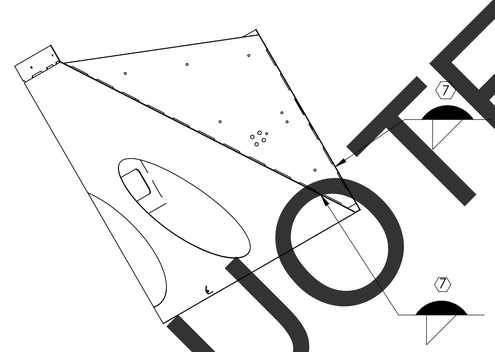

SECTION D-D

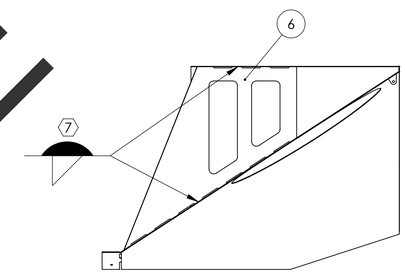

SECTION E-E

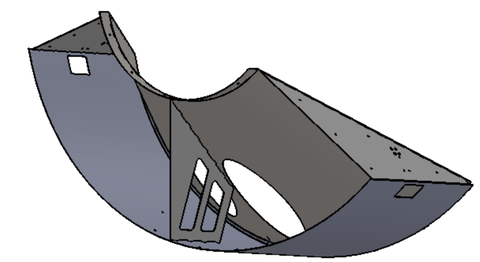

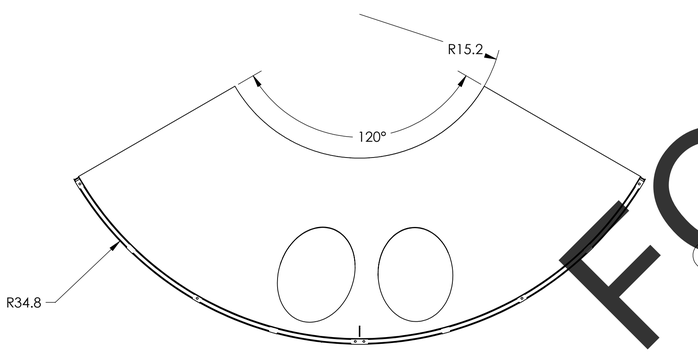

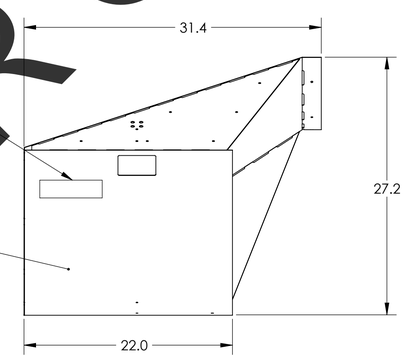

ITEM NO.	PART NUMBER	DESCRIPTION	MATERIAL	REQ	SPARE	TOTAL
6	D1002849	MANIFOLD CRYO BAFFLE WELDMENT BRACE	14 GAUGE 304 SSTL	1		1
5	D1000536	BAFFLE BRACE BRACKET	14 GAUGE 304 SSTL	1		1
4	D1001073	RADIAL ATTACHMENT NUT PLATE	14 GAUGE 304 SSTL	1		1
3	D0902621	MANIFOLD CRYO BAFFLE BRACKET	14 GAUGE 304 SSTL	2		2
2	D0902620	RADIAL SEGMENT, BOTTOM	18 GAUGE 304 SSTL	1		1
1	D1003185	MANIFOLD-CRYO BAFFLE INNER SEGMENT, ETMX H1 BOTTOM	18 GAUGE 304 SSTL	1		1

PARTS LIST

NOTES AND TOLERANCES: (UNLESS OTHERWISE SPECIFIED)

DIMENSIONS ARE IN INCHES

TOLERANCES:
.X ± .1
.XX ± .06
.XXX ± .010

ANGULAR ± 1.0°

1. INTERPRET DRAWING PER ASME Y14.5-1994.
2. REMOVE ALL SHARP EDGES, .005-.015 ON ALL EDGES AND HOLES.
3. DO NOT SCALE FROM DRAWING.
4. ALL MACHINING FLUIDS MUST BE FULLY SYNTHETIC, FULLY WATER SOLUBLE AND FREE OF SULFUR, SILICONE, AND CHLORINE.

MATERIAL A424 TYPE I STEEL
FINISH N/A

LIGO CALIFORNIA INSTITUTE OF TECHNOLOGY
MASSACHUSETTS INSTITUTE OF TECHNOLOGY

SYSTEM ADVANCED LIGO
SUB-SYSTEM AOS
NEXT ASSY D1003183

PART NAME MANIFOLD -CRYO BAFFLE SEGMENT SUBASSEMBLY WELDMENT, ETMX H1, BOTTOM

DESIGNER	H. KELMAN	17 MAR 2010
DRAFTER	TQ. NGUYEN	3 SEP 2010
CHECKER	M. SMITH	
APPROVAL	D. COYNE	

SIZE D **DWG. NO.** D1003184 **REV.** v2
SCALE: 1:8 **PROJECTION:** SHEET 1 OF 1

FOR QUOTE ONLY

D1003184_aLIGO_Manifold_Cryo_Baffle_Segment_Subassembly_Weldment_Bottom , PART FDM REV: X-017 , DRAWING FDM REV: X-003

NOTES CONTINUED:

5. SCRIBE, ENGRAVE (A VIBRATORY TOOL MAY BE USED), LASER MARK (NO INKS OR DYES) DRAWING PART NUMBER, REVISION (AND VARIENT OR "TYPE" IF APPLICABLE) ON NOTED SURFACE OF PART FOLLOWED ON THE NEXT LINE WITH A THREE DIGIT SERIAL NUMBER. SERIAL NUMBERS START AT 001 FOR THE FIRST ARTICLE AND PROCEED CONSECUTIVELY. USE MINIMUM 0.12" HIGH CHARACTERS, UNLESS THE SIZE OF THE PART DICTATES SMALLER CHARACTERS. EXAMPLE: DXXXXXXX-VY, TYPE-XX, S/N XXX DO NOT APPLY MARK ON SUPER #8 SIDE

6. CONE AND LIP TO BE WELDED WHERE PIECES MAKE CONTACT. WELDING MUST BE PER SPECIFICATION E0900048.

7. DELETED

8. ALL PARTS SHALL BE MANUFACTURED IN ACCORDANCE WITH LIGO SPECIFICATION E0900364.

9. ALL MATERIAL IS TO BE VIRGIN MATERIAL (i.e. NO WELD REPAIRS, PLUGS OR RECYCLED MATERIAL). NO REPAIRS SHALL BE MADE UNLESS APPROVED IN ADVANCE, AND IN WRITING, BY LIGO LABORATORY. REFER TO LIGO-E0900364.

10. SURFACE FINISH TO BE AS-PROCESSED FROM MILL/SUPPLIER, FREE FROM SCRATCHES OR GOUGES.

REV.	DATE	DCN #	DRAWING TREE #
v1	28 JUL 2011	E1000360-v2	-
v2	20 OCT 2011	E1000360-v3	-
v3	31 OCT 2012	-	-

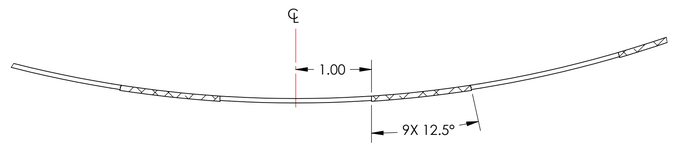

SECTION B-B
SCALE 1 : 1

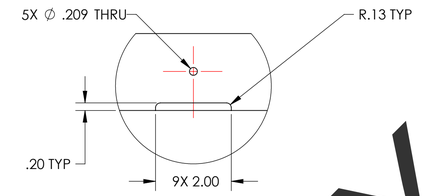

DETAIL C
SCALE 1 : 2

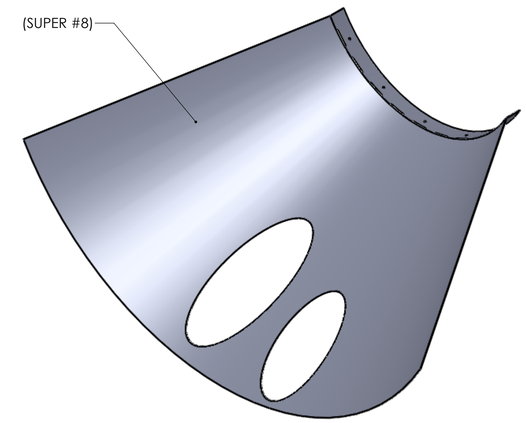

GENERAL VIEW
FOR REFERENCE ONLY
NO SCALE

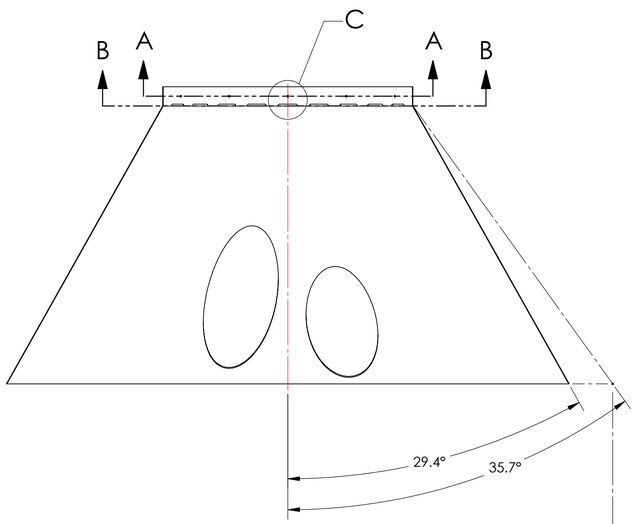

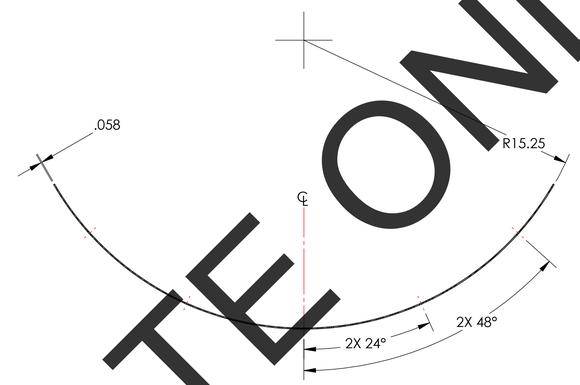

SECTION A-A
SCALE 1 : 4

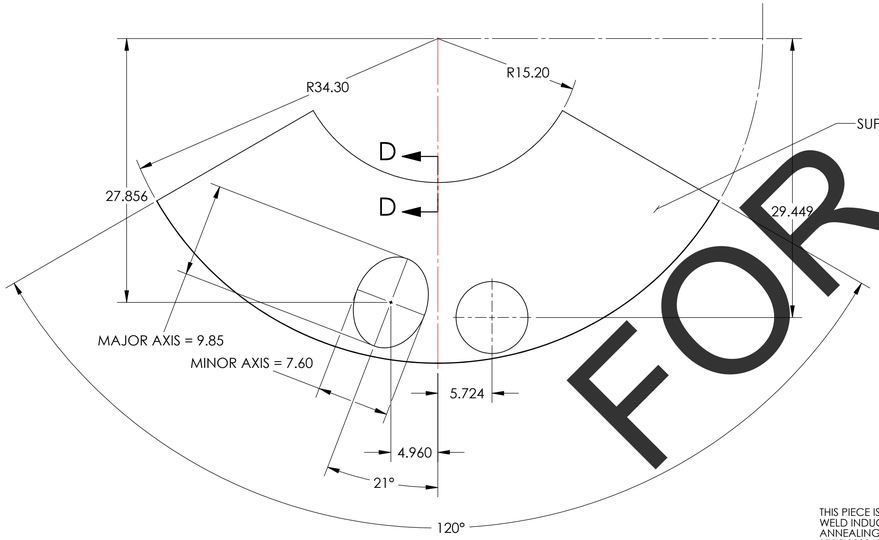

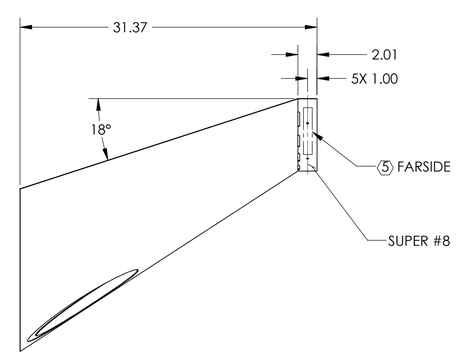

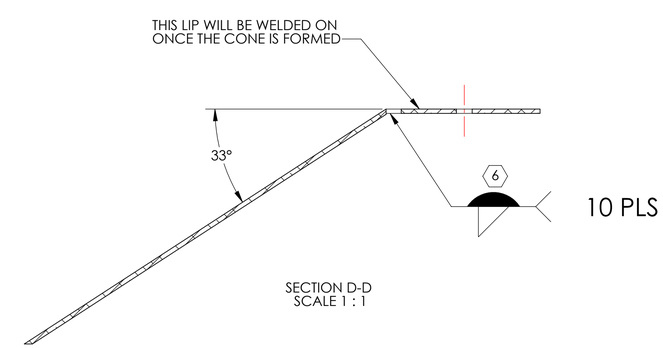

SECTION D-D
SCALE 1 : 1

FOR QUOTE ONLY

THIS PIECE IS PART OF A WELDMENT. DIMENSIONS SHOWN ARE APPROXIMATE; WELD INDUCED SHRINKAGE OR FILL, AND POST WELD ANNEALING AND MACHINING CONSIDERATIONS ARE NOT INCLUDED. SEE D0902655 FOR REQUIRED DIMENSIONS FOR STRUCTURE AFTER WELDMENT.

DIMENSIONS ARE IN INCHES

TOLERANCES:
.XX ± .06
.XXX ± .010

ANGULAR ± 0.1°

NOTES AND TOLERANCES: (UNLESS OTHERWISE SPECIFIED)

1. INTERPRET DRAWING PER ASME Y14.5-1994.
2. REMOVE ALL SHARP EDGES, .005-.015 ON ALL EDGES AND HOLES.
3. DO NOT SCALE FROM DRAWING.
4. ALL MACHINING FLUIDS MUST BE FULLY SYNTHETIC, FULLY WATER SOLUBLE AND FREE OF SULFUR, SILICONE, AND CHLORINE.

MATERIAL 18 GAUGE 304 SSTL

FINISH 10 SUPER #8

LIGO CALIFORNIA INSTITUTE OF TECHNOLOGY
MASSACHUSETTS INSTITUTE OF TECHNOLOGY

SYSTEM ADVANCED LIGO

SUB-SYSTEM AOS

NEXT ASSY D1003184

PART NAME MANIFOLD-CRYO BAFFLE INNER SEGMENT, ETMX H1 BOTTOM

DESIGNER	TQ. NGUYEN	6 DEC 2010	SIZE	D
DRAFTER	TQ. NGUYEN	6 DEC 2010		
CHECKER	M. SMITH	27 JAN 2012		
APPROVAL	D. COYNE	27 JAN 2012	SCALE: 1:8	

DWG. NO. D1003185 **REV.** v3

PROJECTION: SHEET 1 OF 1

D1003185 ol/LIGO_Manifold_Cryo_Baffle_Inner_Segment_ETMX H1_Bottom_PART PDM REV: X-042, DRAWING PDM REV: X-036

NOTES CONTINUED:

⑤ SCRIBE, ENGRAVE (A VIBRATORY TOOL MAY BE USED), LASER MARK (NO INKS OR DYES) DRAWING PART NUMBER, REVISION (AND VARIENT OR "TYPE" IF APPLICABLE) ON NOTED SURFACE OF PART FOLLOWED ON THE NEXT LINE WITH A THREE DIGIT SERIAL NUMBER. SERIAL NUMBERS START AT 001 FOR THE FIRST ARTICLE AND PROCEED CONSECUTIVELY. USE MINIMUM 0.12" HIGH CHARACTERS, UNLESS THE SIZE OF THE PART DICTATES SMALLER CHARACTERS.
EXAMPLE: DXXXXXXX-VY, TYPE-XX, S/N XXX
DO NOT APPLY MARK ON SUPER #8 SIDE

6. ASSEMBLY TO BE OXIDIZED AFTER WELDMENT IS COMPLETED PER SPECIFICATION E1100842.

⑦ FILLET WELDS WHERE ITEMS ① & ③, ① & ⑤, & ① & ④ MAKE CONTACT. WELDING MUST BE PER SPECIFICATION E0900048

REV.	DATE	DCN #	DRAWING TREE #
v1	1 OCT 2010	E1000360-v2	E1000091
v2	20 OCT 2010	E1000360-v3	

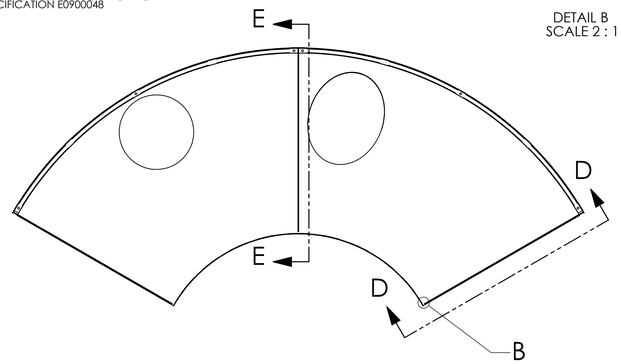

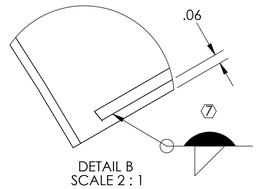

DETAIL B
SCALE 2 : 1

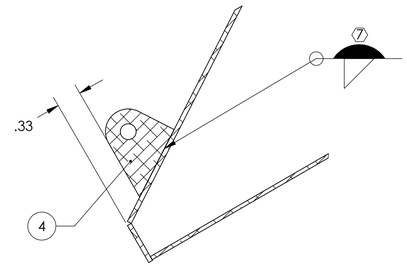

SECTION C-C
SCALE 1 : 1

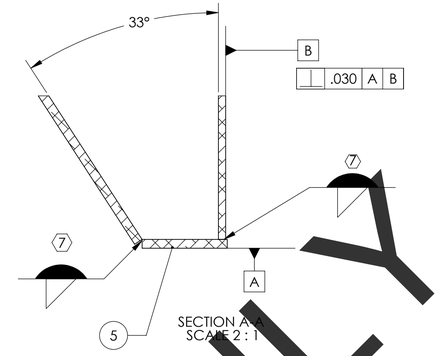

SECTION A-A
SCALE 2 : 1

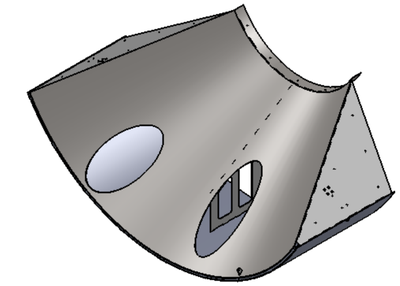

GENERAL VIEW
FOR REFERENCE ONLY
NO SCALE

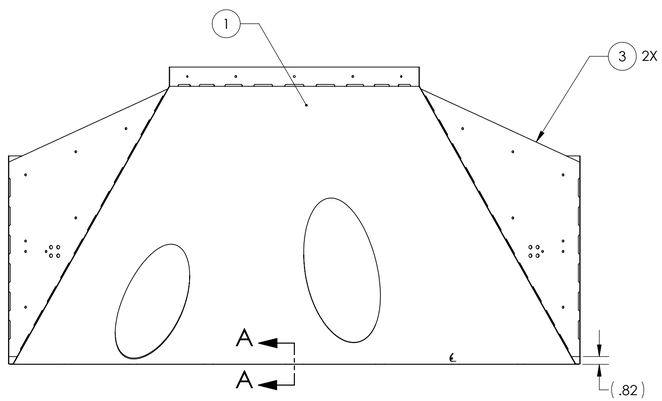

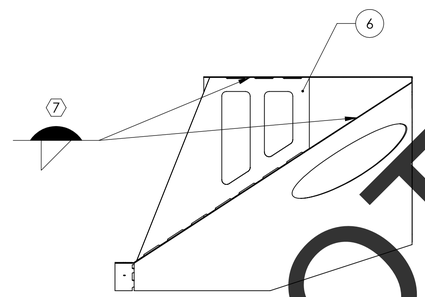

SECTION E-E

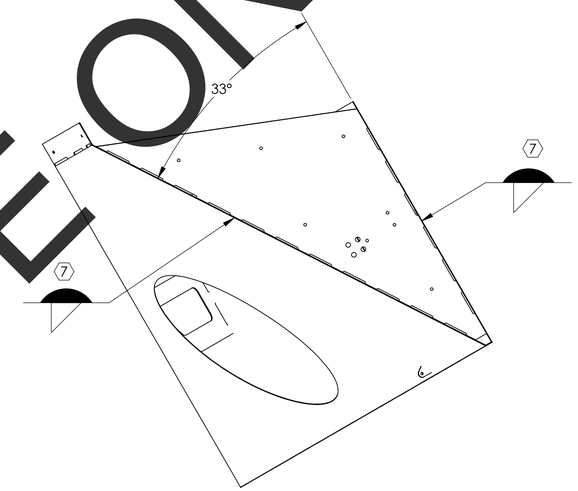

SECTION D-D
SCALE 1 : 6

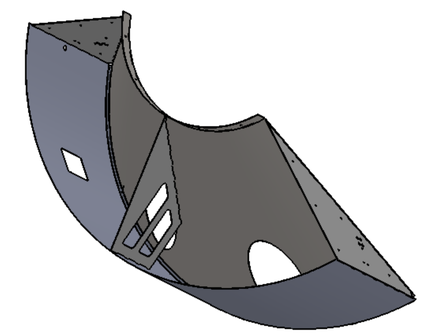

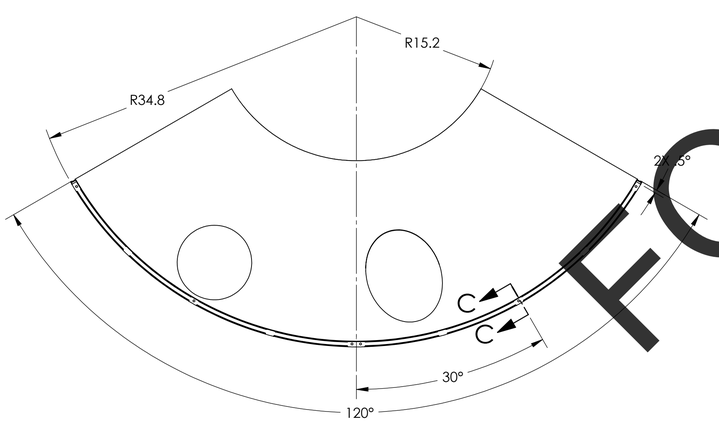

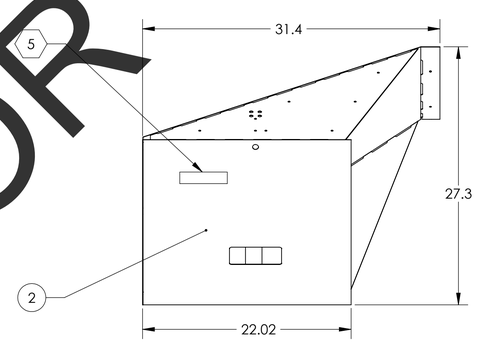

ITEM NO.	PART NUMBER	DESCRIPTION	MATERIAL	QTY.	SPARE	TOTAL
6	D1002849	MANIFOLD CRYO BAFFLE WELDMENT BRACE	14 GAUGE 304 SSTL	1		0
5	D1000559	RADIAL SEGMENT, RIGHT	18 GAUGE 304 SSTL	1		0
4	D1001073	RADIAL ATTACHMENT NUT PLATE	14 GAUGE 304 SSTL	1		0
3	D1000536	BAFFLE BRACE BRACKET	14 GAUGE 304 SSTL	1		0
2	D0902621	MANIFOLD CRYO BAFFLE BRACKET	14 GAUGE 304 SSTL	2		0
1	D1003187	MANIFOLD-CRYO BAFFLE INNER SEGMENT WELDMENT, ETMX H1, RIGHT	18 GAUGE 304 SSTL	1		0

PARTS LIST

FOR QUOTE ONLY

NOTES AND TOLERANCES: (UNLESS OTHERWISE SPECIFIED)

DIMENSIONS ARE IN INCHES

TOLERANCES:
.X ± .1
.XX ± .06
.XXX ± .010

ANGULAR ± 1.0°

1. INTERPRET DRAWING PER ASME Y14.5-1994.
2. REMOVE ALL SHARP EDGES, .005-.015 ON ALL EDGES AND HOLES.
3. DO NOT SCALE FROM DRAWING.
4. ALL MACHINING FLUIDS MUST BE FULLY SYNTHETIC, FULLY WATER SOLUBLE AND FREE OF SULFUR, SILICONE, AND CHLORINE.

MATERIAL: N/A
FINISH: N/A

LIGO CALIFORNIA INSTITUTE OF TECHNOLOGY MASSACHUSETTS INSTITUTE OF TECHNOLOGY

SYSTEM: ADVANCED LIGO
SUB-SYSTEM: AOS
NEXT ASSY: D1003183

PART NAME: MANIFOLD CRYO BAFFLE SEGMENT SUBASSEMBLY WELDMENT, ETMX H1, RIGHT

DESIGNER	H. KELMAN	20 MAY 2010	SIZE D	DWG. NO. D1003186	REV. v2
DRAFTER	TQ. NGUYEN	07 SEP 2010			
CHECKER	M. SMITH				
APPROVAL	D. COYNE		SCALE: 1:8	PROJECTION:	SHEET 1 OF 1

D1003186_aLIGO_Manifold_Cryo_Baffle_Segment_Subassembly_Weldment_ETMX H1, Right, PART PDM REV: X-013, DRAWING PDM REV: X-003

REV.	DATE	DCN #	DRAWING TREE #
v1	28 JUL 2011	E1000360-v1	-
v2	20 OCT 2011	E1000360-v3	-
-	-	-	-

NOTES CONTINUED:

5. SCRIBE, ENGRAVE (A VIBRATORY TOOL MAY BE USED), LASER MARK (NO INKS OR DYES) DRAWING PART NUMBER, REVISION (AND VARIENT OR "TYPE" IF APPLICABLE) ON NOTED SURFACE OF PART FOLLOWED ON THE NEXT LINE WITH A THREE DIGIT SERIAL NUMBER. SERIAL NUMBERS START AT 001 FOR THE FIRST ARTICLE AND PROCEED CONSECUTIVELY. USE MINIMUM 0.12" HIGH CHARACTERS, UNLESS THE SIZE OF THE PART DICTATES SMALLER CHARACTERS.
   EXAMPLE: DXXXXXXX-VY, TYPE-XX, S/N XXX
   DO NOT APPLY MARK ON SUPER #8 SIDE

6. CONE AND LIP TO BE WELDED WHERE PIECES MAKE CONTACT. WELDING MUST BE PER SPECIFICATION E0900048.

7. DELETED

8. ALL PARTS SHALL BE MANUFACTURED IN ACCORDANCE WITH LIGO SPECIFICATION E0900364.

9. ALL MATERIAL IS TO BE VIRGIN MATERIAL (i.e. NO WELD REPAIRS, PLUGS OR RECYCLED MATERIAL). NO REPAIRS SHALL BE MADE UNLESS APPROVED IN ADVANCE, AND IN WRITING, BY LIGO LABORATORY. REFER TO LIGO-E0900364.

10. SURFACE FINISH TO BE AS-PROCESSED FROM MILL/SUPPLIER, FREE FROM SCRATCHES OR GOUGES.

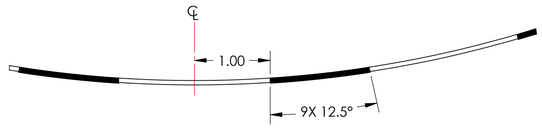

SECTION B-B
SCALE 1 : 1

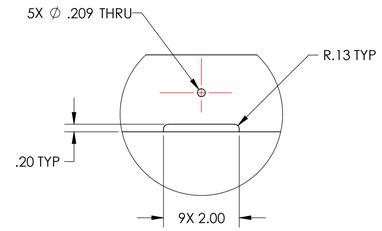

DETAIL D
SCALE 1 : 2

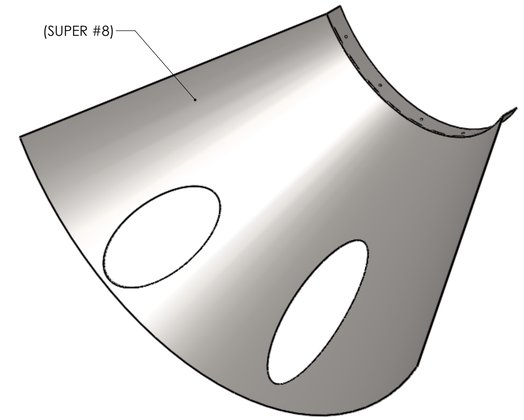

GENERAL VIEW
FOR REFERENCE
NO SCALE

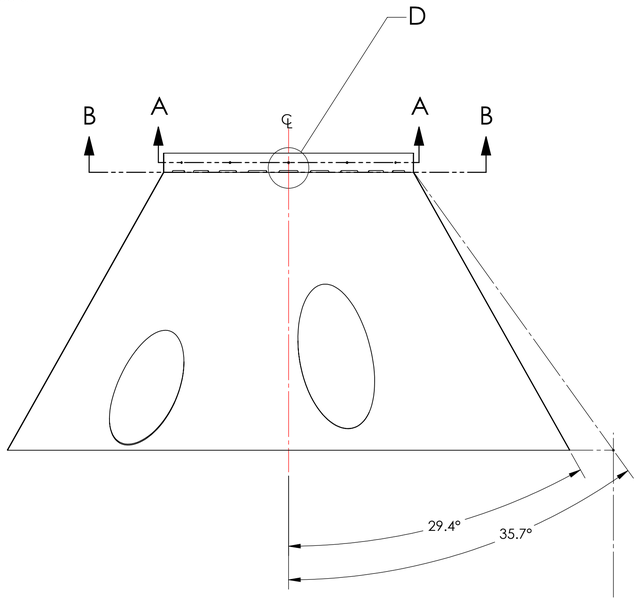

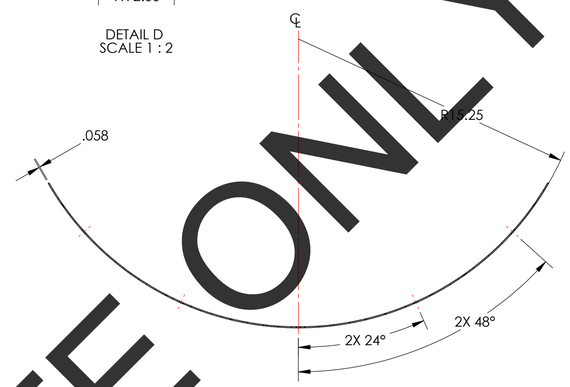

SECTION A-A
SCALE 1 : 4

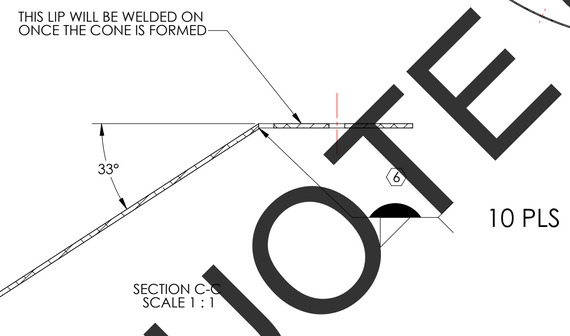

SECTION C-C
SCALE 1 : 1

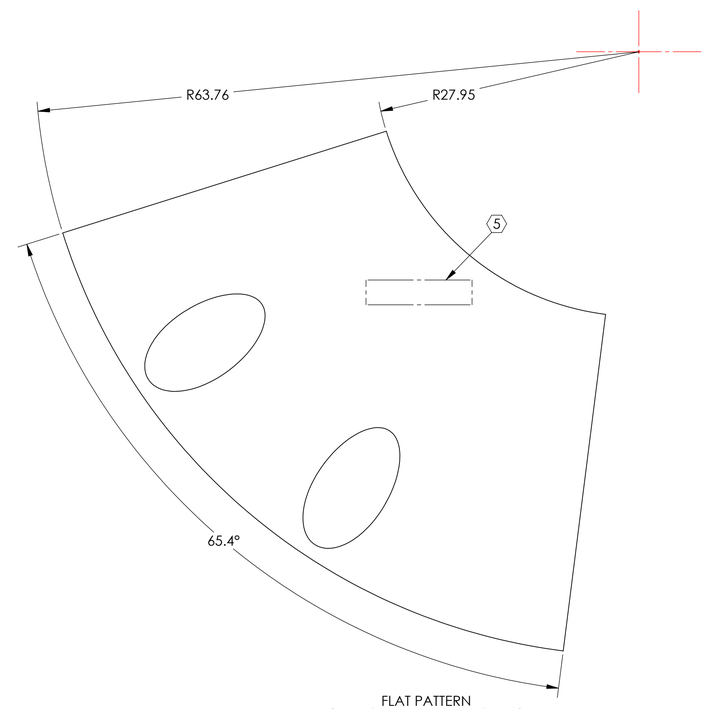

FLAT PATTERN
(ATTACHMENT LIP REMOVED)

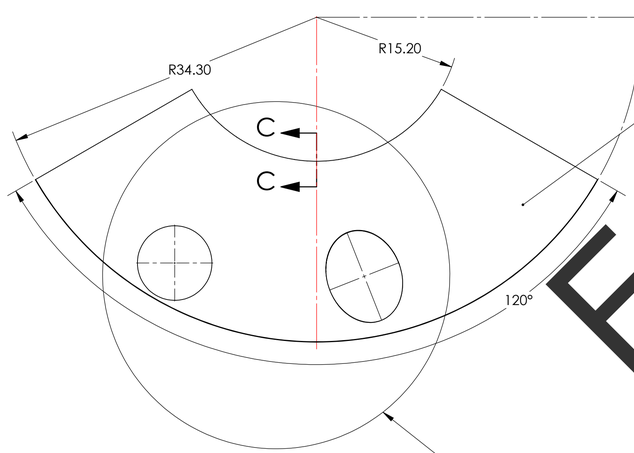

SEE DETAIL F ON NEXT SHEET

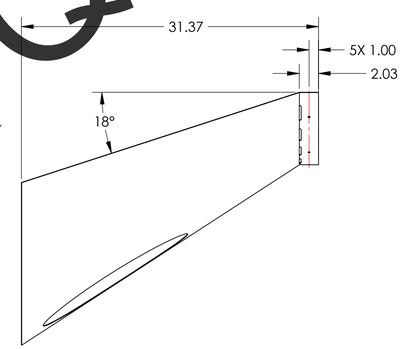

FOR QUOTE ONLY

THIS PIECE IS PART OF A WELDMENT. DIMENSIONS SHOWN ARE APPROXIMATE; WELD INDUCED SHRINKAGE OR FILL, AND POST WELD ANNEALING AND MACHINING CONSIDERATIONS ARE NOT INCLUDED. SEE D0902654 FOR REQUIRED DIMENSIONS FOR STRUCTURE AFTER WELDMENT.

DIMENSIONS ARE IN INCHES

TOLERANCES:
.XX ± .06
.XXX ± .010

ANGULAR ±0.5°

NOTES AND TOLERANCES: (UNLESS OTHERWISE SPECIFIED)

1. INTERPRET DRAWING PER ASME Y14.5-1994.
2. REMOVE ALL SHARP EDGES. .005-.015 ON ALL EDGES AND HOLES.
3. DO NOT SCALE FROM DRAWING.
4. ALL MACHINING FLUIDS MUST BE FULLY SYNTHETIC, FULLY WATER SOLUBLE AND FREE OF SULFUR, SILICONE, AND CHLORINE.

MATERIAL 18 GAUGE 304 SSTL

FINISH 10 SUPER #8

LIGO CALIFORNIA INSTITUTE OF TECHNOLOGY
MASSACHUSETTS INSTITUTE OF TECHNOLOGY

SYSTEM ADVANCED LIGO

SUB-SYSTEM AOS

NEXT ASSY D1003186

PART NAME MANIFOLD-CRYO BAFFLE INNER SEGMENT WELDMENT, ETMX H1, RIGHT

DESIGNER	TQ. NGUYEN	6 DEC 2010
DRAFTER	TQ. NGUYEN	7 DEC 2010
CHECKER	M. SMITH	
APPROVAL	D. COYNE	

SIZE D **DWG. NO.** D1003187 **REV.** v2

SCALE: 1:8 **PROJECTION:** **SHEET 1 OF 2**

D1003187 aLIGO_Manifold_Cryo_Baffle_Inner_Segment, ETMX H1, RIGHT, PART PDM REV-X-013, DRAWING PDM REV-X-022

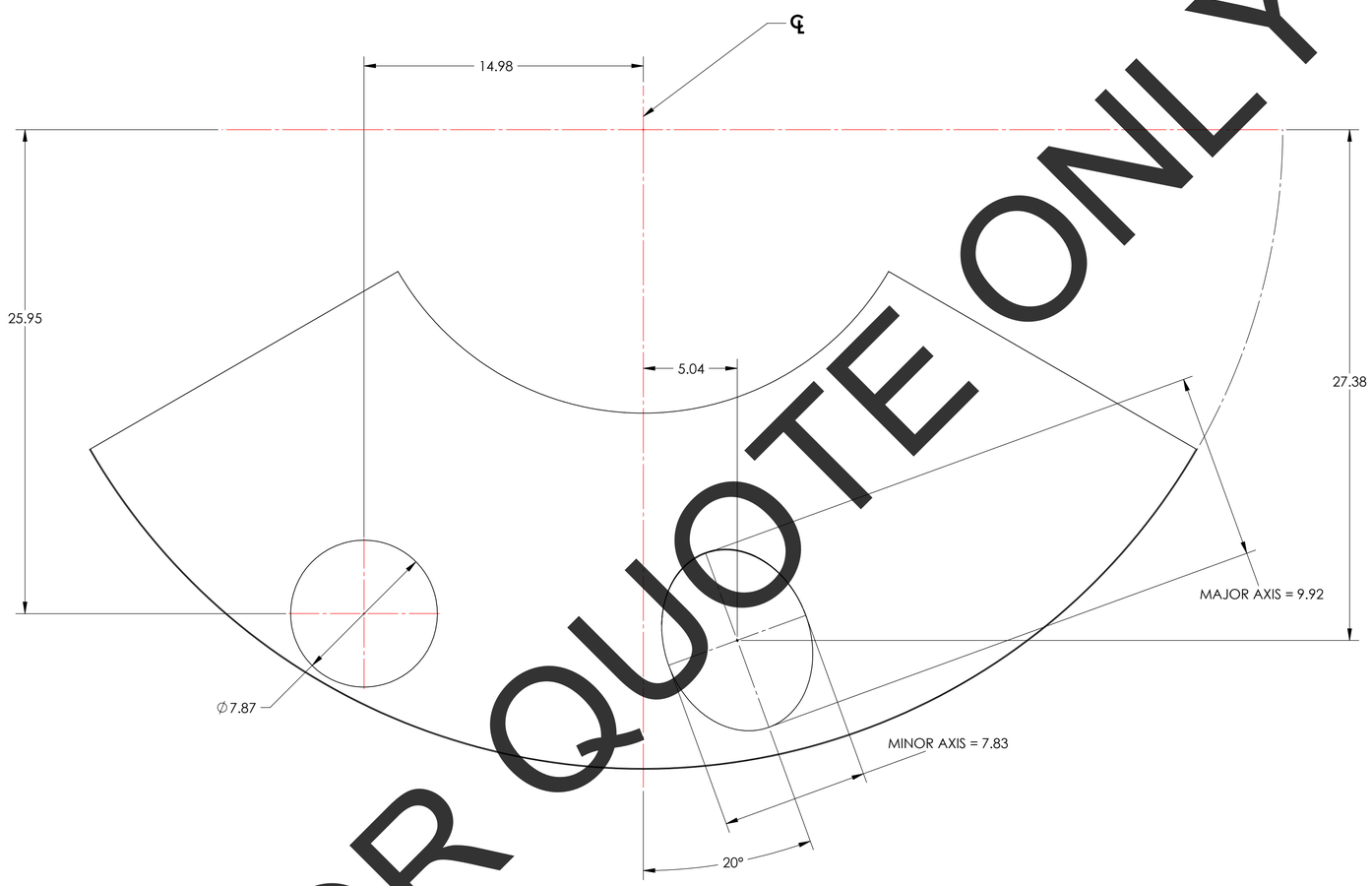

DETAIL F
SCALE 1:4

FOR QUOTE ONLY

D1003187 aLIGO_Manifold_Cryo_Baffle_Inner_Segment, ETMX H1, RIGHT, PART PDM REV: X-013, DRAWING PDM REV: X-022

LIGO
CALIFORNIA INSTITUTE OF TECHNOLOGY
MASSACHUSETTS INSTITUTE OF TECHNOLOGY

SIZE	DWG. NO.	REV.
D	D1003187	v2
SCALE: 1:8	PROJECTION:	SHEET 2 OF 2

NOTES CONTINUED:

⑤ SCRIBE, ENGRAVE (A VIBRATORY TOOL MAY BE USED), LASER MARK (NO INKS OR DYES) DRAWING PART NUMBER, REVISION (AND VARIENT OR "TYPE" IF APPLICABLE) ON NOTED SURFACE OF PART FOLLOWED ON THE NEXT LINE WITH A THREE DIGIT SERIAL NUMBER. SERIAL NUMBERS START AT 001 FOR THE FIRST ARTICLE AND PROCEED CONSECUTIVELY. USE MINIMUM 0.12" HIGH CHARACTERS, UNLESS THE SIZE OF THE PART DICTATES SMALLER CHARACTERS.
EXAMPLE: DXXXXXXX-VY, TYPE-XX, S/N XXX
DO NOT APPLY MARK ON SUPER #8 SIDE

6. ASSEMBLY TO BE OXIDIZED AFTER WELDMENT IS COMPLETED PER SPECIFICATION E1100842.

⑦ FILLET WELDS WHERE ITEMS MAKE CONTACT. WELDING MUST BE PER SPECIFICATION E0900048.

REV.	DATE	DCN #	DRAWING TREE #
v1	28 JUL 2011	E1000360-v2	-
v2	20 OCT 2011	E1000360-v3	-
-	-	-	-

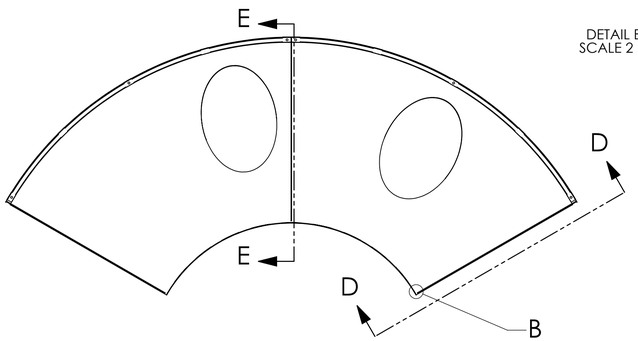

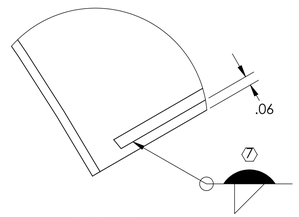

DETAIL B
SCALE 2 : 1

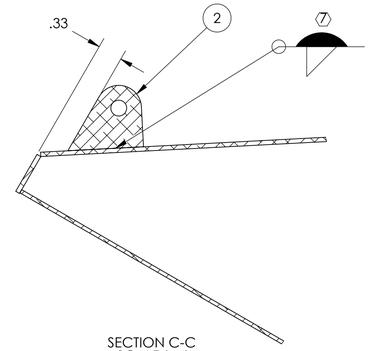

SECTION C-C
SCALE 1 : 1

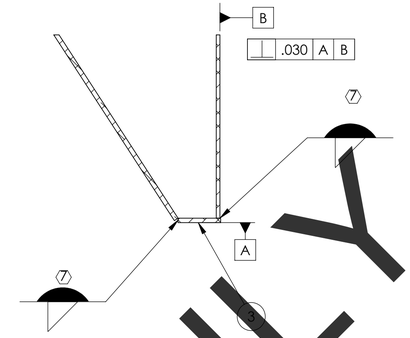

SECTION A-A
SCALE 1 : 1

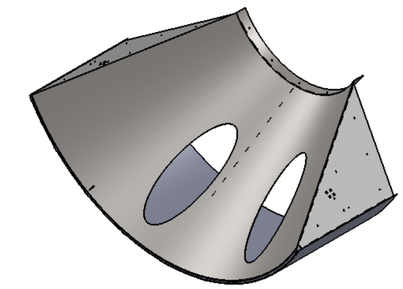

GENERAL VIEW
FOR REFERENCE ONLY
NO SCALE

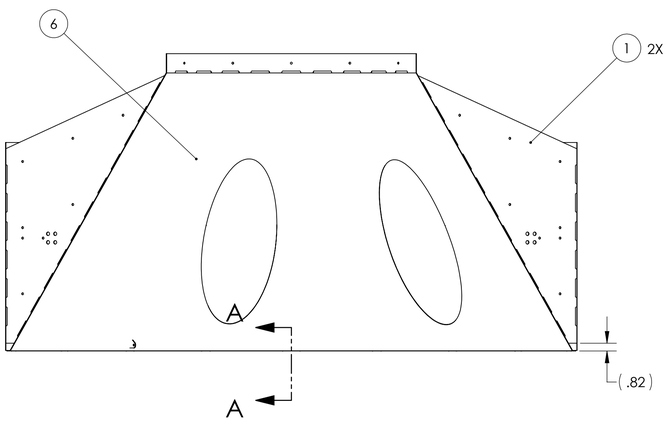

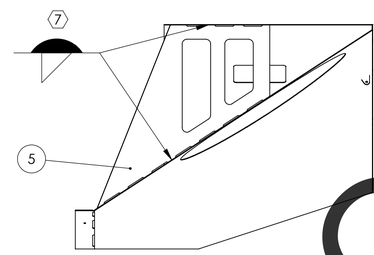

SECTION E-E

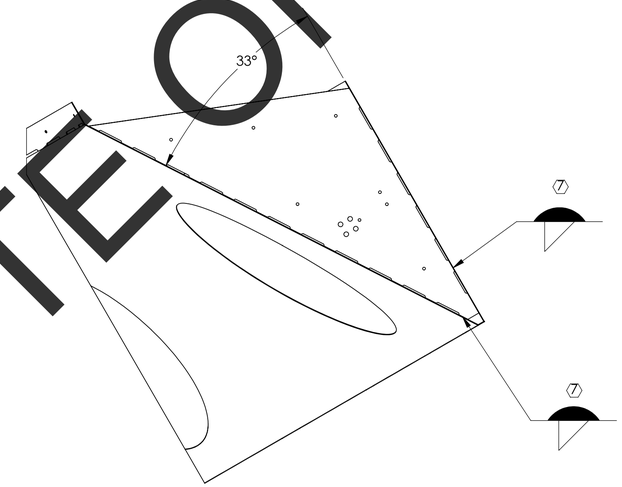

SECTION D-D
SCALE 1 : 6

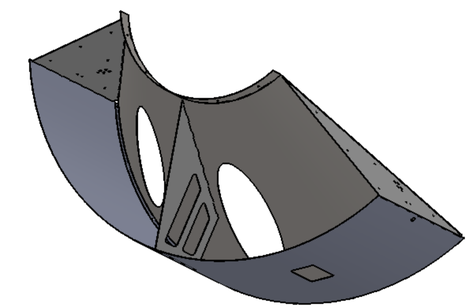

GENERAL VIEW
FOR REFERENCE ONLY
NO SCALE

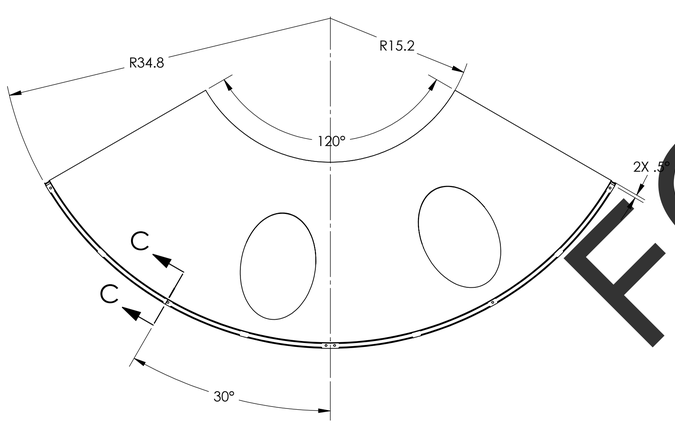

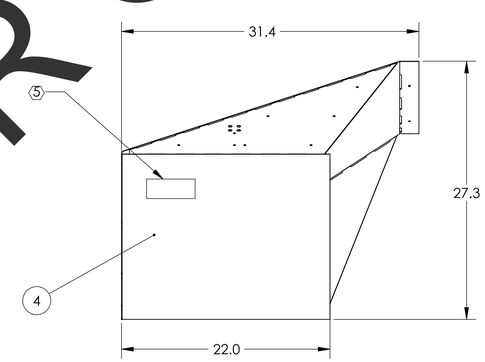

FOR QUOTE ONLY

ITEM NO.	PART NUMBER	DESCRIPTION	MATERIAL	REQ	SPARE	TOTAL
6	D1003191	MANIFOLD-CRYO BAFFLE INNER SEGMENT WELDMENT, ETMX H1, LEFT	18 GAUGE 304 SSTL	1		1
5	D1002849	MANIFOLD CRYO BAFFLE WELDMENT BRACE	14 GAUGE 304 SSTL	1		1
4	D1000558	RADIAL SEGMENT, LEFT	18 GAUGE 304 SSTL	1		1
3	D1001073	RADIAL ATTACHMENT NUT PLATE	14 GAUGE 304 SSTL	1		1
2	D1000536	BAFFLE BRACE BRACKET	14 GAUGE 304 SSTL	1		1
1	D0902621	MANIFOLD CRYO BAFFLE BRACKET	14 GAUGE 304 SSTL	2		2

PARTS LIST

DIMENSIONS ARE IN INCHES

TOLERANCES:
.X ± .1
.XX ± .06
.XXX ± .010

ANGULAR ± 1.0°

NOTES AND TOLERANCES: (UNLESS OTHERWISE SPECIFIED)

1. INTERPRET DRAWING PER ASME Y14.5-1994.
2. REMOVE ALL SHARP EDGES, R.02 MIN.
3. DO NOT SCALE FROM DRAWING.
4. ALL MACHINING FLUIDS MUST BE FULLY SYNTHETIC, FULLY WATER SOLUBLE AND FREE OF SULFUR, SILICONE, AND CHLORINE.

MATERIAL N/A

FINISH N/A

LIGO CALIFORNIA INSTITUTE OF TECHNOLOGY
MASSACHUSETTS INSTITUTE OF TECHNOLOGY

SYSTEM ADVANCED LIGO

SUB-SYSTEM AOS

NEXT ASSY D1003183

PART NAME MANIFOLD-CRYO BAFFLE SEGMENT SUBASSEMBLY WELDMENT, ETMX H1, LEFT

DESIGNER	H. KELMAN	20 MAY 2010
DRAFTER	TQ. NGUYEN	07 SEP 2010
CHECKER	M. SMITH	
APPROVAL	D. COYNE	

SIZE D **DWG. NO.** D1003188 **REV.** v2

SCALE: 1:8 **PROJECTION:** SHEET 1 OF 1

D1003188 caLIGO_Manifold_Cryo_Baffle_Segment_Subassembly_Weldment_ETMX H1, Left, PART FDM REV-X-011, DRAWING FDM REV-X-004

REV.	DATE	DCN #	DRAWING TREE #
v1	17 MAY 2011	E1000360-v2	-
v2	31 OCT 2012	E1000360-v3	-
-	-	-	-

NOTES CONTINUED:

⑤ SCRIBE, ENGRAVE (A VIBRATORY TOOL MAY BE USED), LASER MARK (NO INKS OR DYES) DRAWING PART NUMBER, REVISION (AND VARIENT OR "TYPE" IF APPLICABLE) ON NOTED SURFACE OF PART FOLLOWED ON THE NEXT LINE WITH A THREE DIGIT SERIAL NUMBER. SERIAL NUMBERS START AT 001 FOR THE FIRST ARTICLE AND PROCEED CONSECUTIVELY. USE MINIMUM 0.12" HIGH CHARACTERS, UNLESS THE SIZE OF THE PART DICTATES SMALLER CHARACTERS.
EXAMPLE: DXXXXXXX-VY, TYPE-XX, S/N XXX
DO NOT APPLY MARK ON SUPER #8 SIDE

6. APPROXIMATE WEIGHT = 11.072 LBS.

7. ALL PARTS SHALL BE MANUFACTURED IN ACCORDANCE WITH LIGO SPECIFICATION E0900364.

8. ALL MATERIAL IS TO BE VIRGIN MATERIAL (i.e. NO WELD REPAIRS, PLUGS OR RECYCLED MATERIAL). NO REPAIRS SHALL BE MADE UNLESS APPROVED IN ADVANCE, AND IN WRITING, BY LIGO LABORATORY. REFER TO LIGO-E0900364.

⑨. PART TO BE OXIDIZED PER LIGO SPECIFICATION E1100842.

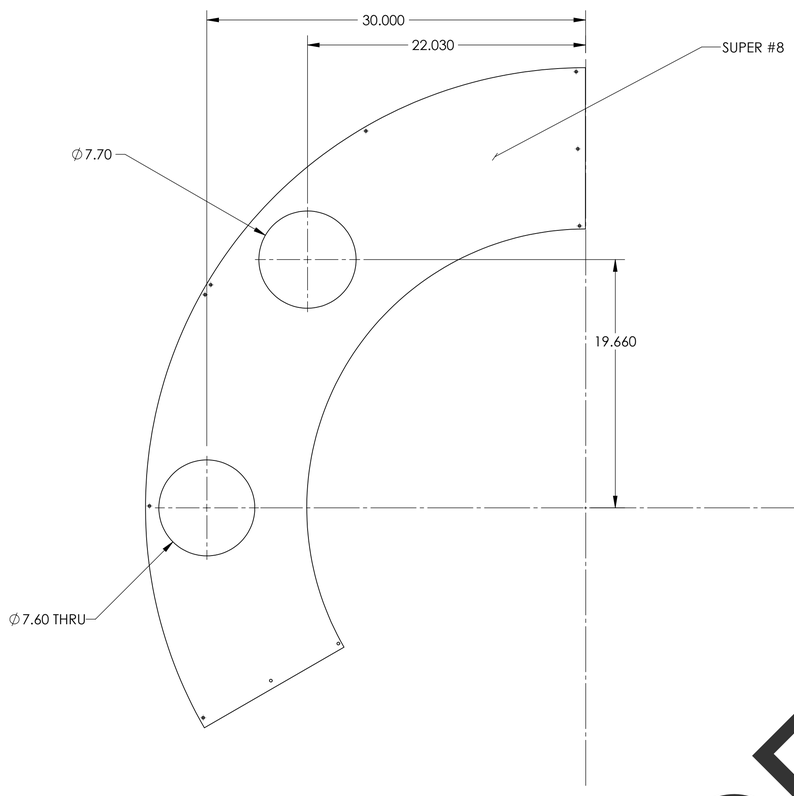

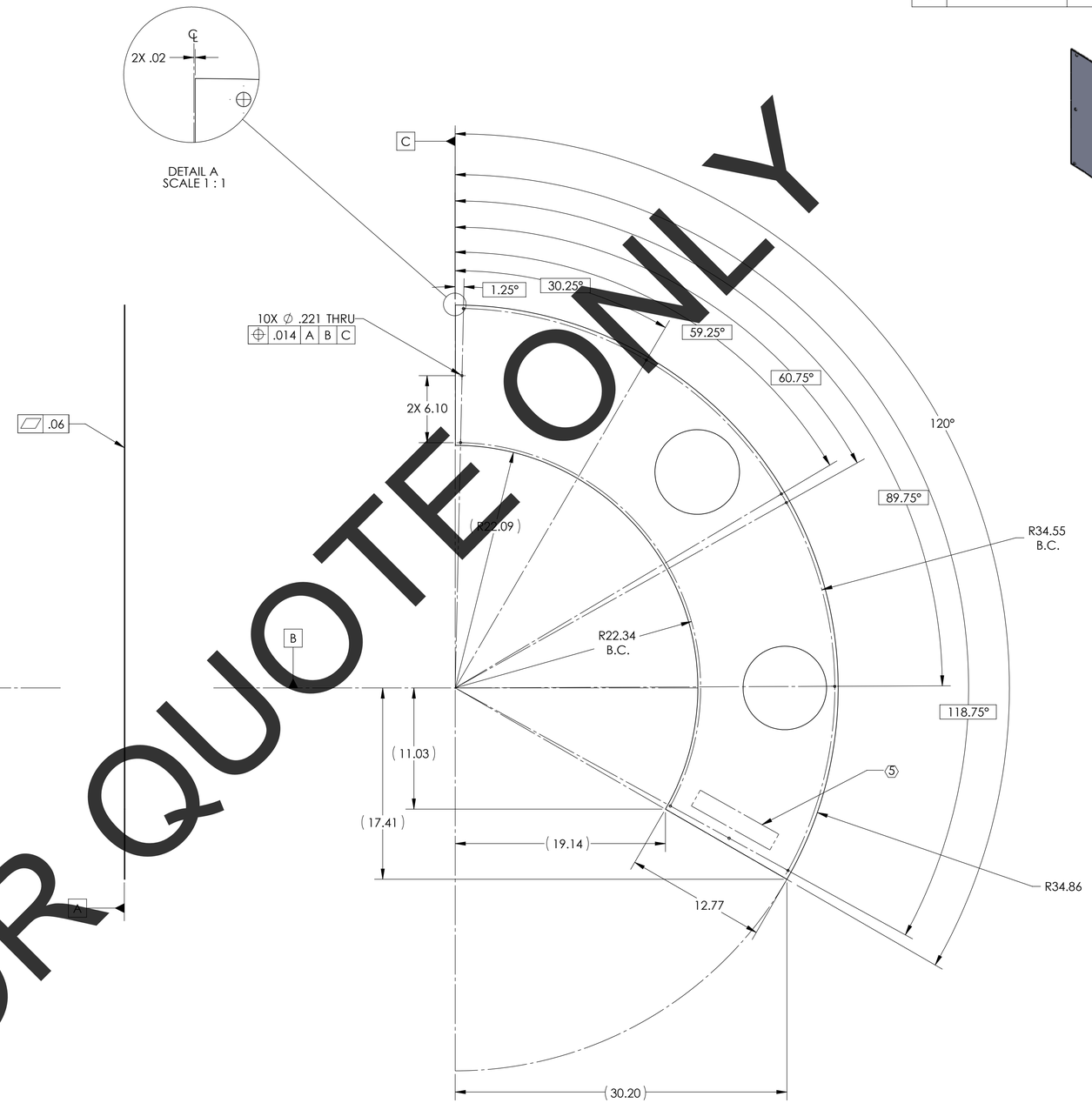

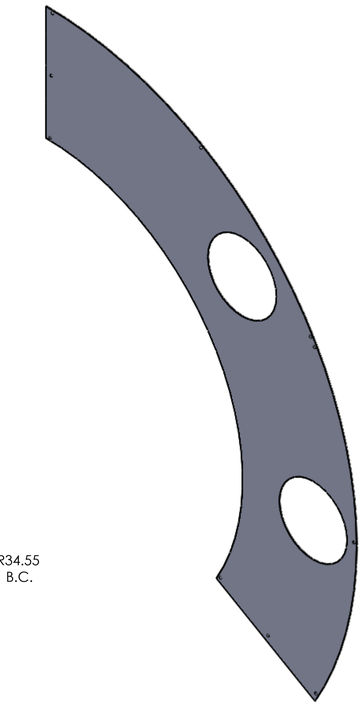

GENERAL VIEW
FOR REFERENCE ONLY
NO SCALE

FOR QUOTE ONLY

DIMENSIONS ARE IN

TOLERANCES:
.XX ± .06
.XXX ± .010

ANGULAR ± 0.5°

NOTES AND TOLERANCES: (UNLESS OTHERWISE SPECIFIED)

1. INTERPRET DRAWING PER ASME Y14.5-1994.
2. REMOVE ALL SHARP EDGES .005-.015 ON ALL EDGES AND HOLES.
3. DO NOT SCALE FROM DRAWING.
4. ALL MACHINING FLUIDS MUST BE FULLY SYNTHETIC, FULLY WATER SOLUBLE AND FREE OF SULFUR, SILICONE, AND CHLORINE.

MATERIAL 18 GAUGE 304 SSTL

FINISH SUPER #8 ⑨

LIGO CALIFORNIA INSTITUTE OF TECHNOLOGY
MASSACHUSETTS INSTITUTE OF TECHNOLOGY

SYSTEM ADVANCED LIGO

SUB-SYSTEM AOS

NEXT ASSY D1003183

PART NAME RIGHT FACE PLATE, ETM X

DESIGNER	TQ. NGUYEN	4 DEC 2010
DRAFTER	TQ. NGUYEN	7 DEC 2010
CHECKER	M. SMITH	
APPROVAL	D. COYNE	

SIZE D **DWG. NO.** D1003189 **REV.** v2

SCALE: 1:6 **PROJECTION:** SHEET 1 OF 1

D1003189 aLIGO_Manifold_Cryo_Baffle_Right_Half_Face_Plate, ETMX H1, PART PDM REV:-X-030, DRAWING PDM REV:-X-024

REV.	DATE	DCN #	DRAWING TREE #
v1	28 JUL 2010	E1000360-v2	-
v2	17 OCT 2011	E1000360-v3	-
-	-	-	-

NOTES CONTINUED:

5. SCRIBE, ENGRAVE (A VIBRATORY TOOL MAY BE USED), LASER MARK (NO INKS OR DYES) DRAWING PART NUMBER, REVISION (AND VARIENT OR "TYPE" IF APPLICABLE) ON NOTED SURFACE OF PART FOLLOWED ON THE NEXT LINE WITH A THREE DIGIT SERIAL NUMBER. SERIAL NUMBERS START AT 001 FOR THE FIRST ARTICLE AND PROCEED CONSECUTIVELY. USE MINIMUM 0.12" HIGH CHARACTERS, UNLESS THE SIZE OF THE PART DICTATES SMALLER CHARACTERS.
EXAMPLE: DXXXXXXX-VY, TYPE-XX, S/N XXX
DO NOT APPLY MARK ON SUPER #8 SIDE

6. CONE AND LIP TO BE WELDED WHERE PIECES MAKE CONTACT. WELD MUST BE PER SPECIFICATION E900048.

7. SURFACE FINISH TO BE AS-PROCESSED FROM MILL/SUPPLIER, FREE FROM SCRATCHES OR GOUGES.

8. ALL PARTS SHALL BE MANUFACTURED IN ACCORDANCE WITH LIGO SPECIFICATION E0900364.

9. ALL MATERIAL IS TO BE VIRGIN MATERIAL (i.e. NO WELD REPAIRS, PLUGS OR RECYCLED MATERIAL). NO REPAIRS SHALL BE MADE UNLESS APPROVED IN ADVANCE, AND IN WRITING, BY LIGO LABORATORY. REFER TO LIGO-E0900364.

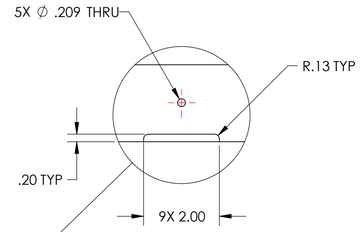

DETAIL D
SCALE 1 : 2

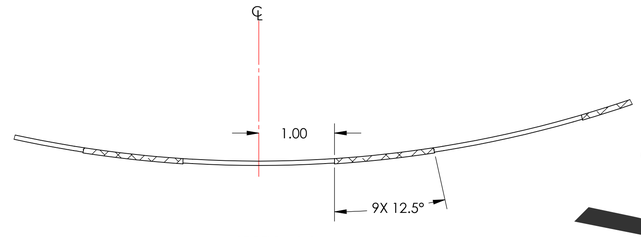

SECTION B-B
SCALE 1 : 1

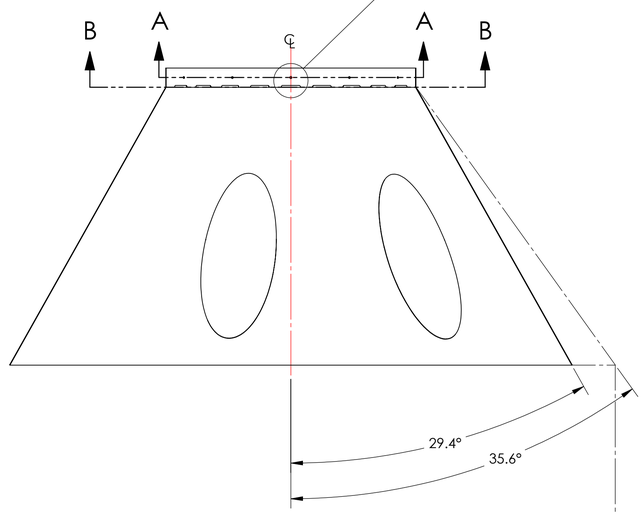

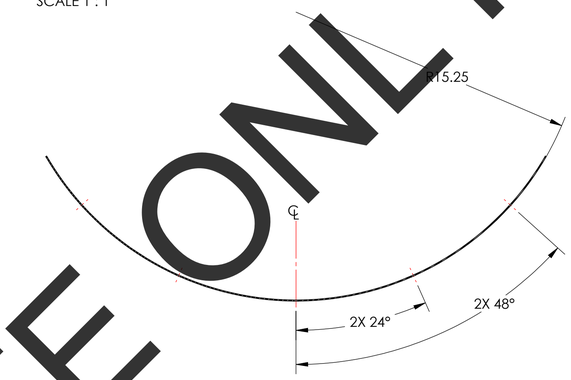

SECTION A-A
SCALE 1 : 4

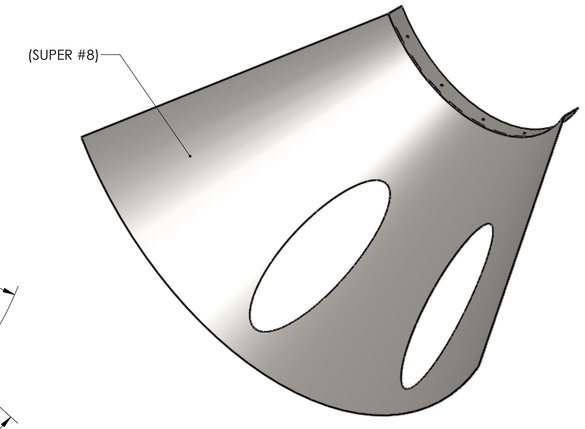

GENERAL VIEW
FOR REFERENCE ONLY
NO SCALE

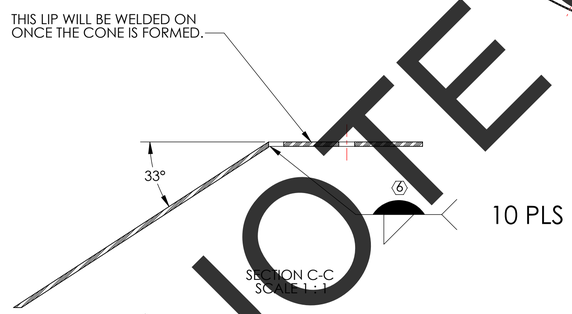

SECTION C-C
SCALE 1 : 1

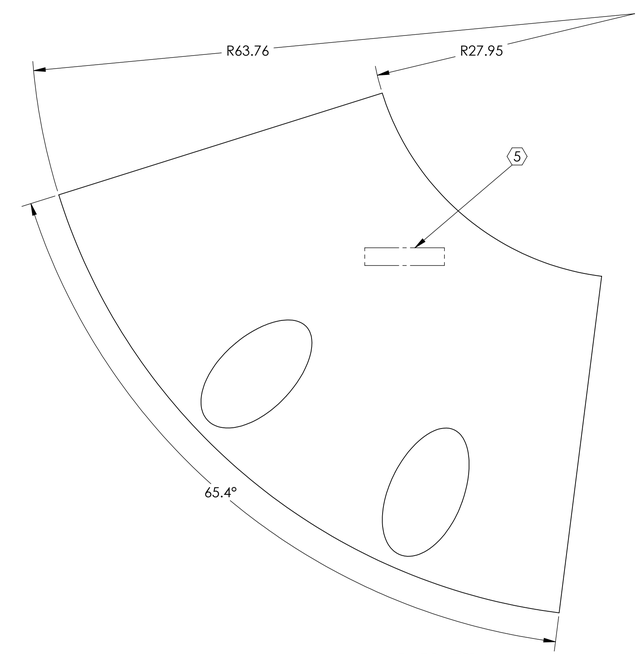

FLAT PATTERN
(ATTACHMENT LIP REMOVED)

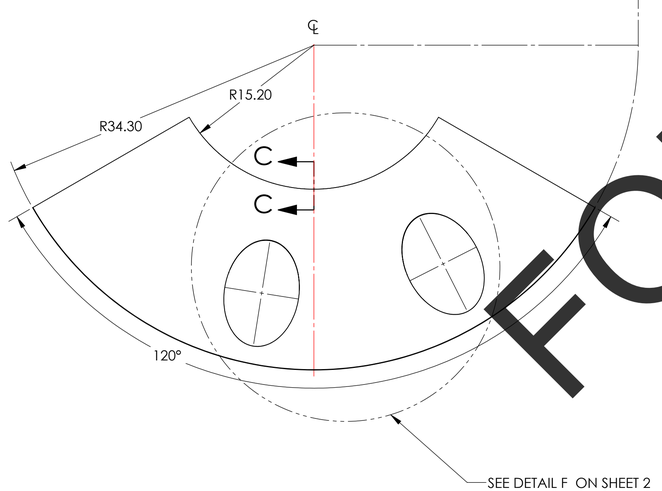

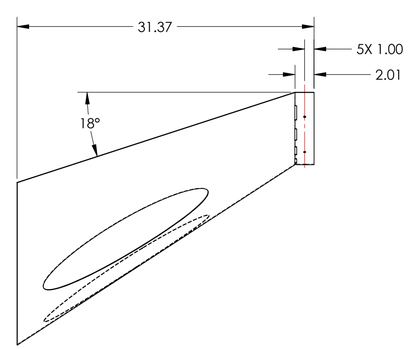

THIS PIECE IS PART OF A WELDMENT. DIMENSIONS SHOWN ARE APPROXIMATE; WELD INDUCED SHRINKAGE OR FILL, AND POST WELD ANNEALING AND MACHINING CONSIDERATIONS ARE NOT INCLUDED. SEE D0902656 FOR REQUIRED DIMENSIONS FOR STRUCTURE AFTER WELDMENT.

FOR QUOTE ONLY

DIMENSIONS ARE IN INCHES

TOLERANCES:
.XX ± .06
.XXX ± .010

ANGULAR ± 0.5°

NOTES AND TOLERANCES: (UNLESS OTHERWISE SPECIFIED)
1. INTERPRET DRAWING PER ASME Y14.5-1994.
2. REMOVE ALL SHARP EDGES, .005-.015 ON ALL EDGES AND HOLES.
3. DO NOT SCALE FROM DRAWING.
4. ALL MACHINING FLUIDS MUST BE FULLY SYNTHETIC, FULLY WATER SOLUBLE AND FREE OF SULFUR, SILICONE, AND CHLORINE.

MATERIAL: 18 GAUGE 304 SSTL
FINISH: 7 SUPER #8

LIGO — CALIFORNIA INSTITUTE OF TECHNOLOGY, MASSACHUSETTS INSTITUTE OF TECHNOLOGY

SYSTEM: ADVANCED LIGO
SUB-SYSTEM: AOS
NEXT ASSY: D1003188

PART NAME: MANIFOLD-CRYO BAFFLE INNER SEGMENT WELDMENT, ETMX H1, LEFT

DESIGNER	TQ. NGUYEN	6 DEC 2010
DRAFTER	TQ. NGUYEN	7 DEC 2010
CHECKER	M. SMITH	
APPROVAL	D. COYNE	

SIZE: D | DWG. NO.: D1003191 | REV.: v2
SCALE: 1:8 | PROJECTION: | SHEET 1 OF 2

D1003191 aLIGO_Manifold_Cryo_Baffle_Inner_Segment_ETMX H1, Left, PART FDM REV-X-009, DRAWING FDM REV-X-025

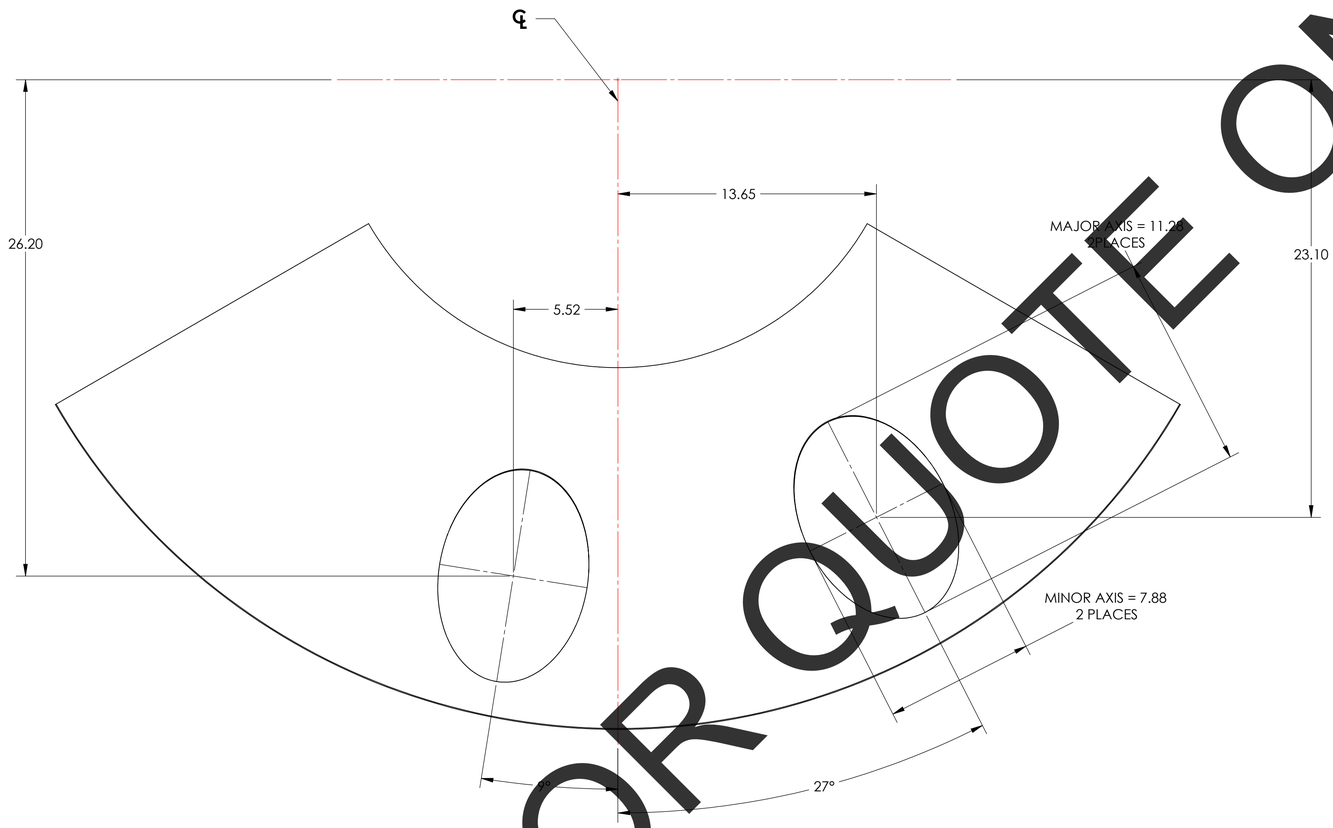

DETAIL F
SCALE 1:4

FOR QUOTE ONLY

LIGO CALIFORNIA INSTITUTE OF TECHNOLOGY
MASSACHUSETTS INSTITUTE OF TECHNOLOGY

SIZE	DWG. NO.	REV.
D	D1003191	v2
SCALE: 1:8	PROJECTION:	SHEET 2 OF 2

D1003191 ol/GO_Manifold_Cryo_Baffle_Inner_Segment, ETMX H1, Left, PART PDM REV: X-009, DRAWING PDM REV: X-025

REV.	DATE	DCN #	DRAWING TREE #
v1	17 MAY 2011	E1000360	-
v2	30 OCT 2012	-	-
-	-	-	-

NOTES CONTINUED:

(5) SCRIBE, ENGRAVE (A VIBRATORY TOOL MAY BE USED), LASER MARK(NO INKS OR DYES) DRAWING PART NUMBERS, REVISION (AND VARIANT OR ""TYPE" IF APPLICALBE) ON NOTED SURFACE OF PART FOLLOWED ON THE NEXT LINE WITH A THREE DIGIT SERIAL NUMBERS. SERIAL NUMBERS START AT 001 FOR FIRST ARTICLE AND PROCEED CONSECTIVELY. USE MINIMUM .12" HIGH CHARCTERS, UNLLESS THE SIZE OF THE PART DICTATES SMALLER CHARACTERS. EXAMPLE: DXXXXXXX-VY, TYPEXX, S/N XXX DO NOT APPLY MARK ON SUPER #8 SIDE.

6. APPROXIMATE WEIGHT = 11.074 LBS.

7. ALL PARTS SHALL BE MANUFACTURED IN ACCORDANCE WITH LIGO SPECIFICATION E0900364.

8. ALL MATERIAL IS TO BE VIRGIN MATERIAL (i.e. NOT WELD REPAIRS OR PLUGS) UNLESS APPROVED IN ADVANCE IN WRITING BY LIGO, REFER TO LIGO-E0900364.

9. NO REPAIRS SHALL BE MADE UNLESS APPROVED IN ADVANCE, AND IN WRITING, BY LIGO LABORATORY. IN GENERAL WELD REPAIRS AND PRESS FIT INSERT REPAIRS ARE NEVER ACCEPTABLE: THE MATERIAL SHOUL DBE MADE WITH VIRGIN MATERIAL. SPECIAL CIRCUMSTANCES CAN BE REVIEWED IF / WHEN BROUGHT TO THE ATTENTION OF LIGO CONTRACTING OFFICER'S REPRESENTITIVE (COTR) THROUGH A MATERIAL REVIEW BOARD (MRB) PROCESS, REFER TO LIGO-E0900364.

(10) PART TO BE OXIDIXED PER LIGO SPECIFICATION E1100842.

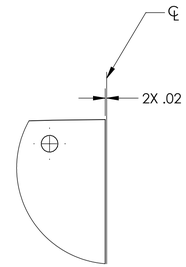

DETAIL A
SCALE 1 : 1

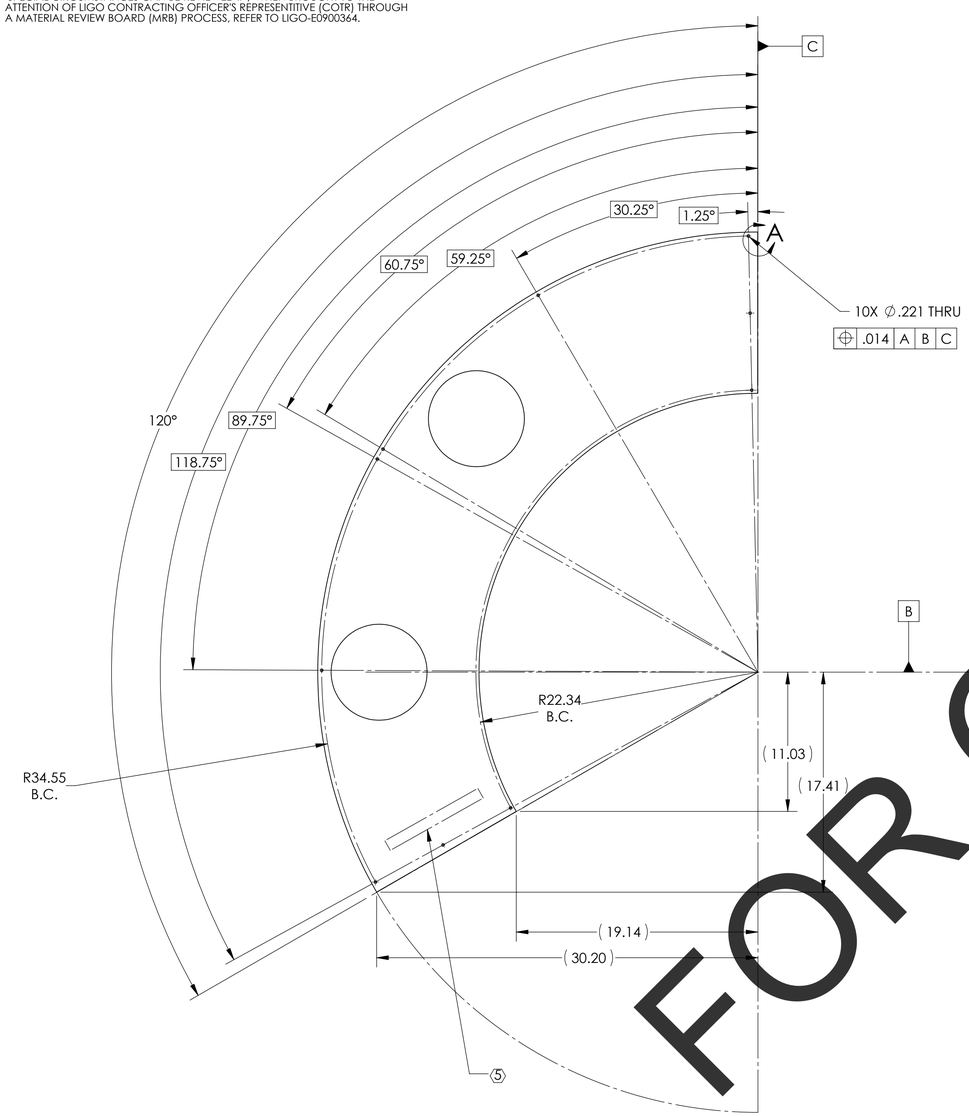

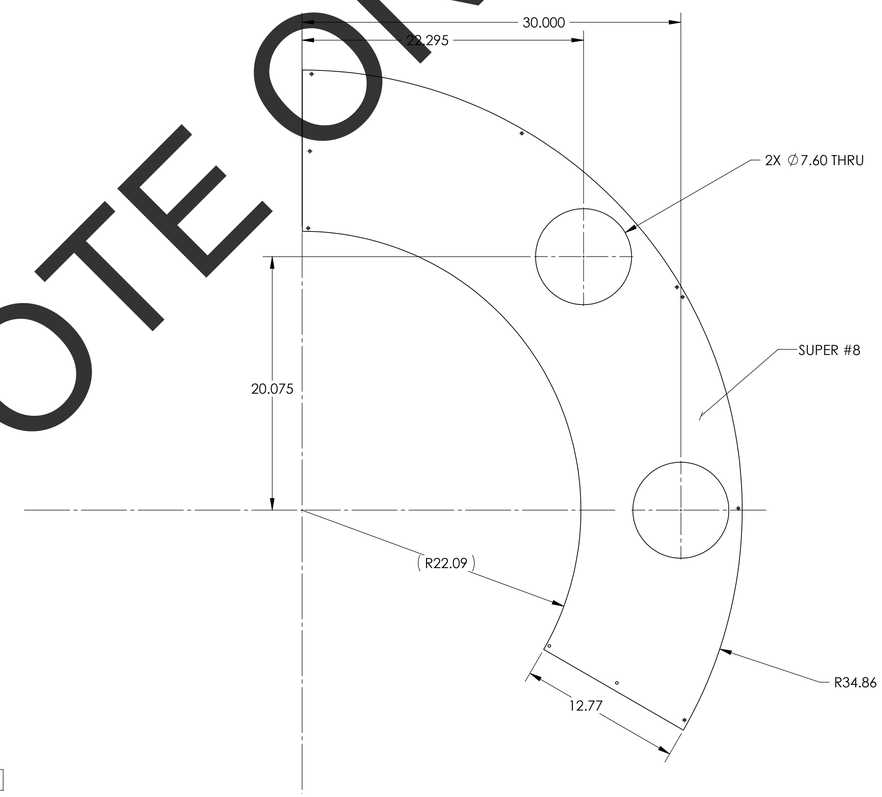

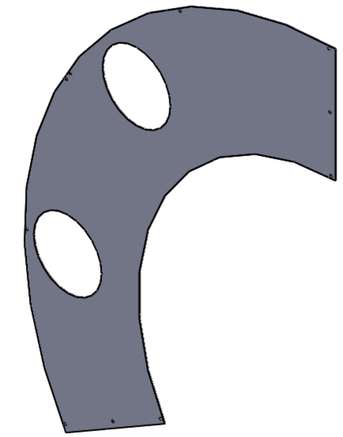

GENERAL VIEW
FOR REFERENCE ONLY
NO SCALE

FOR QUOTE ONLY

NOTES AND TOLERANCES: (UNLESS OTHERWISE SPECIFIED)

DIMENSIONS ARE IN INCHES

TOLERANCES:
.XX ± .06
.XXX ± .010

ANGULAR ± 0.5°

1. INTERPRET DRAWING PER ASME Y14.5-1994.
2. REMOVE ALL SHARP EDGES, R.02 MIN.
3. DO NOT SCALE FROM DRAWING.
4. ALL MACHINING FLUIDS MUST BE FULLY SYNTHETIC, FULLY WATER SOLUBLE AND FREE OF SULFUR, SILICONE, AND CHLORINE.

MATERIAL: 18 GAUGE 304 SSTL

FINISH: SUPER #8 (10)

LIGO — CALIFORNIA INSTITUTE OF TECHNOLOGY / MASSACHUSETTS INSTITUTE OF TECHNOLOGY

SYSTEM: ADVANCED LIGO

SUB-SYSTEM: AOS

NEXT ASSY: D1003183

PART NAME: LEFT FACE PLATE, ETM X

DESIGNER	TQ. NGUYEN	7 DEC 2010
DRAFTER	TQ. NGUYEN	7 DEC 2010
CHECKER	M. SMITH	
APPROVAL	D. COYNE	

SIZE: D

DWG. NO.: D1003203

REV.: v2

SCALE: 1:6

PROJECTION:

SHEET 1 OF 1

D1003203 aLIGO_Manifold_Cryo_Baffle_Left_Half_Face_Plate, ETMX H1, PART PDM REV: X-029, DRAWING PDM REV: X-022

NOTES CONTINUED:

⑤ SCRIBE, ENGRAVE (A VIBRATORY TOOL MAY BE USED), LASER MARK OR MECHANICALLY STAMP (NO INKS OR DYES) DRAWING PART NUMBER, REVISION (AND VARIANT OR "TYPE" IF APPLICABLE) ON NOTED SURFACE OF PART FOLLOWED ON THE NEXT LINE WITH A THREE DIGIT SERIAL NUMBER. SERIAL NUMBERS START AT 001 FOR THE FIRST ARTICLE AND PROCEED CONSECUTIVELY. USE MINIMUM 0.12" HIGH CHARACTERS, UNLESS THE SIZE OF THE PART DICTATES SMALLER CHARACTERS. EXAMPLE: DXXXXXXX-VY, TYPE-XX, S/N XXX

6. ASSEMBLY TO BE OXIDIZED AFTER WELDMENT IS COMPLETED PER SPECIFICATION E1100842.

⑦ FILLET WELDS WHERE ITEMS ① & ③, ① & ⑤, ② & ③, ① & ④ MAKE CONTACT. WELDING MUST BE PER SPECIFICTION E0900048

REV.	DATE	DCN #	DRAWING TREE #
v1	29 JUL 2011	E1000360-v2	-
v2	17 OCT 2011	E1000360-v3	-
-	-	-	-

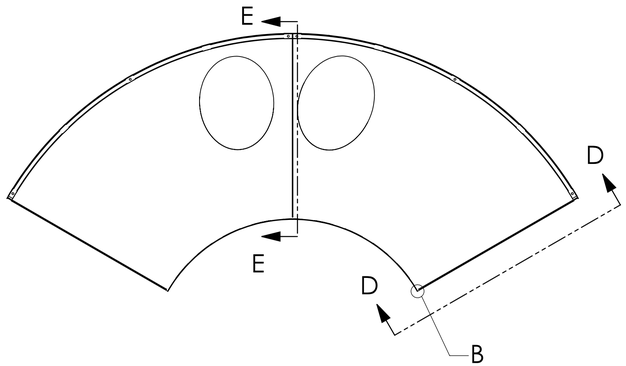

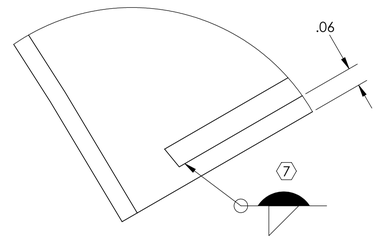

DETAIL B
SCALE 4 : 1

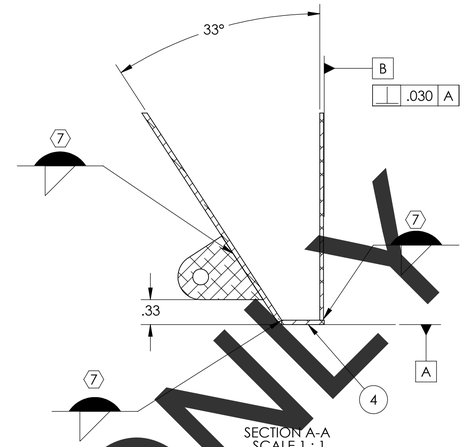

SECTION A-A
SCALE 1 : 1

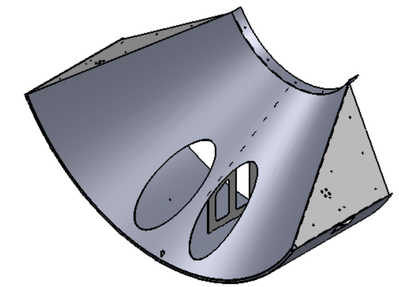

GENERAL VIEW
FOR REFERENCE ONLY
NO SCALE

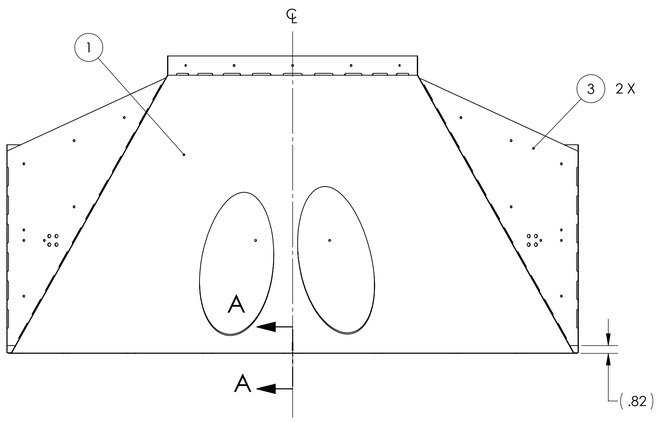

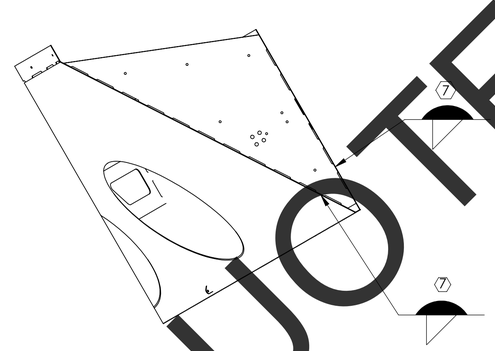

SECTION D-D

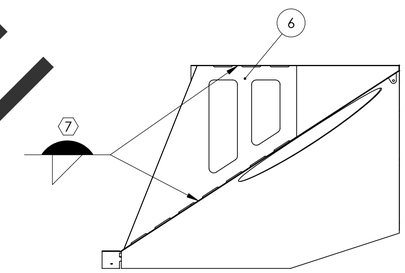

SECTION E-E

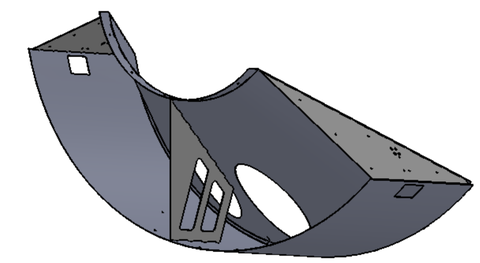

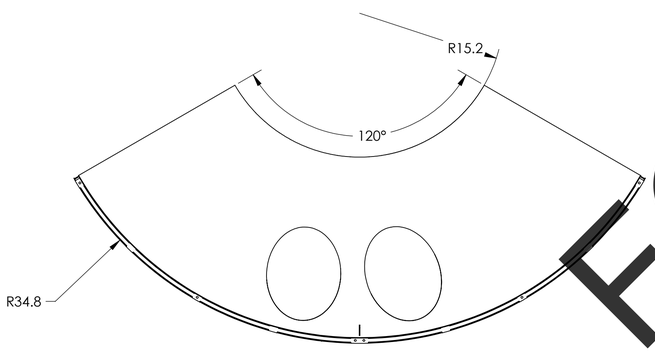

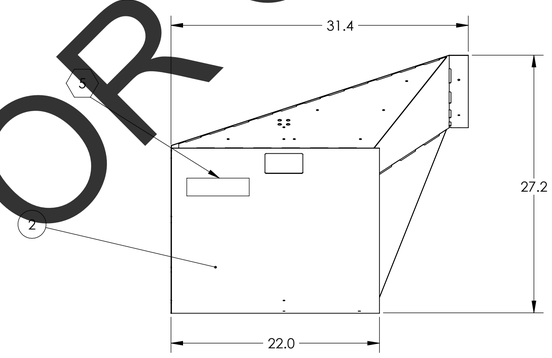

FOR QUOTE ONLY

ITEM NO.	PART NUMBER	DESCRIPTION	MATERIAL	REQ	SPARE	TOTAL
6	D1002849	MANIFOLD CRYO BAFFLE WELDMENT BRACE	14 GAUGE 304 SSTL	1		1
5	D1000536	BAFFLE BRACE BRACKET	14 GAUGE 304 SSTL	1		1
4	D1001073	RADIAL ATTACHMENT NUT PLATE	14 GAUGE 304 SSTL	1		1
3	D0902621	MANIFOLD CRYO BAFFLE BRACKET	14 GAUGE 304 SSTL	2		2
2	D0902620	RADIAL SEGMENT, BOTTOM	18 GAUGE 304 SSTL	1		1
1	D1003230	MANIFOLD-CRYO BAFFLE INNER SEGMENT, ETMY H1, BOTTOM	18 GAUGE 304 SSTL	1		1

PARTS LIST

DIMENSIONS ARE IN INCHES

TOLERANCES:
.X ± .1
.XX ± .06
.XXX ± .010

ANGULAR ± 1.0°

NOTES AND TOLERANCES: (UNLESS OTHERWISE SPECIFIED)

1. INTERPRET DRAWING PER ASME Y14.5-1994.
2. REMOVE ALL SHARP EDGES .005-.015 ON ALL EDGES AND HOLES.
3. DO NOT SCALE FROM DRAWING.
4. ALL MACHINING FLUIDS MUST BE FULLY SYNTHETIC, FULLY WATER SOLUBLE AND FREE OF SULFUR, SILICONE, AND CHLORINE.

MATERIAL N/A

FINISH N/A

LIGO CALIFORNIA INSTITUTE OF TECHNOLOGY
MASSACHUSETTS INSTITUTE OF TECHNOLOGY

SYSTEM ADVANCED LIGO

SUB-SYSTEM AOS

NEXT ASSY D1003227

PART NAME MANIFOLD -CRYO BAFFLE SEGMENT SUBASSEMBLY WELDMENT, ETMY H1, BOTTOM

DESIGNER	TQ. NUYEN	16 DEC 2010	SIZE D	DWG. NO. D1003229
DRAFTER	TQ. NGUYEN	29 JUL 2011		REV. v2
CHECKER	M. SMITH			
APPROVAL	D. COYNE		SCALE: 1:8	PROJECTION: SHEET 1 OF 1

D1003229_aLIGO_Manifold_Cryo_Baffle_Segment_Subassembly_Weldment_ETMY H1, Bottom, PART PDM REV:X-006, DRAWING PDM REV:X-001

REV.	DATE	DCN #	DRAWING TREE #
V1	07 SEP 2010	E1000360	E1000090
V2	21 OCT 2011	E1000360-v3	-
-	-	-	-

NOTES CONTINUED:

(5) SCRIBE, ENGRAVE (A VIBRATORY TOOL MAY BE USED), LASER MARK (NO INKS OR DYES) DRAWING PART NUMBER, REVISION (AND VARIENT OR "TYPE" IF APPLICABLE) ON NOTED SURFACE OF PART FOLLOWED ON THE NEXT LINE WITH A THREE DIGIT SERIAL NUMBER. SERIAL NUMBERS START AT 001 FOR THE FIRST ARTICLE AND PROCEED CONSECUTIVELY. USE MINIMUM 0.12" HIGH CHARACTERS, UNLESS THE SIZE OF THE PART DICTATES SMALLER CHARACTERS.
EXAMPLE: DXXXXXXX-VY, TYPE-XX, S/N XXX
DO NOT APPLY MARK ON SUPER #8 SIDE

(6). CONE AND LIP TO BE WELDED WHERE PIECES MAKE CONTACT. WELDING MUST BE PER SPECIFICATION E0900048.

7. DELETED

8. ALL PARTS SHALL BE MANUFACTURED IN ACCORDANCE WITH LIGO SPECIFICATION E0900364.

9. ALL MATERIAL IS TO BE VIRGIN MATERIAL (i.e. NO WELD REPAIRS, PLUGS OR RECYCLED MATERIAL). NO REPAIRS SHALL BE MADE UNLESS APPROVED IN ADVANCE, AND IN WRITING, BY LIGO LABORATORY. REFER TO LIGO-E0900364.

(10) SURFACE FINISH TO BE AS-PROCESSED FROM MILL/SUPPLIER, FREE FROM SCRATCHES OR GOUGES.

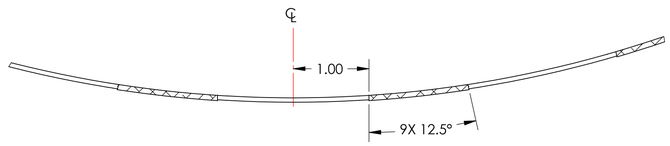

SECTION B-B
SCALE 1 : 1

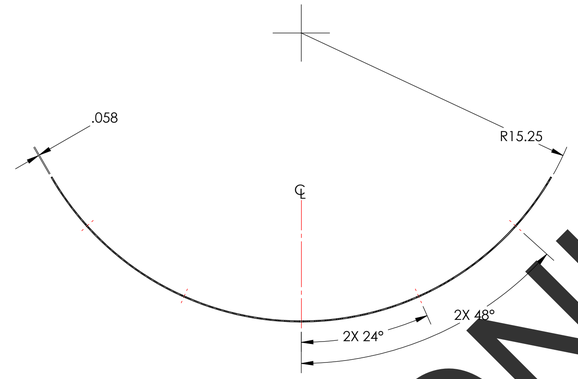

SECTION A-A
SCALE 1 : 4

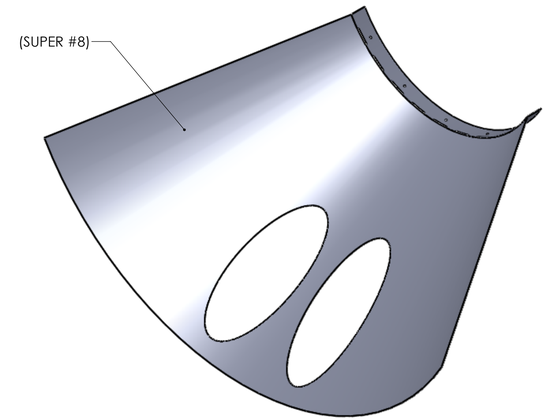

GENERAL VIEW
FOR REFERENCE ONLY
NO SCALE

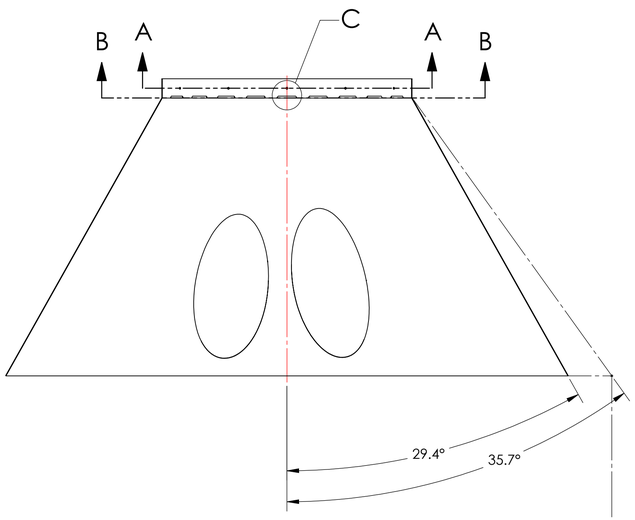

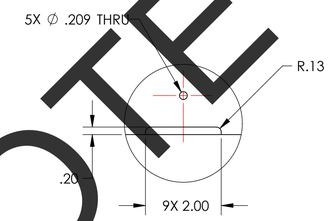

DETAIL C
SCALE 1 : 2

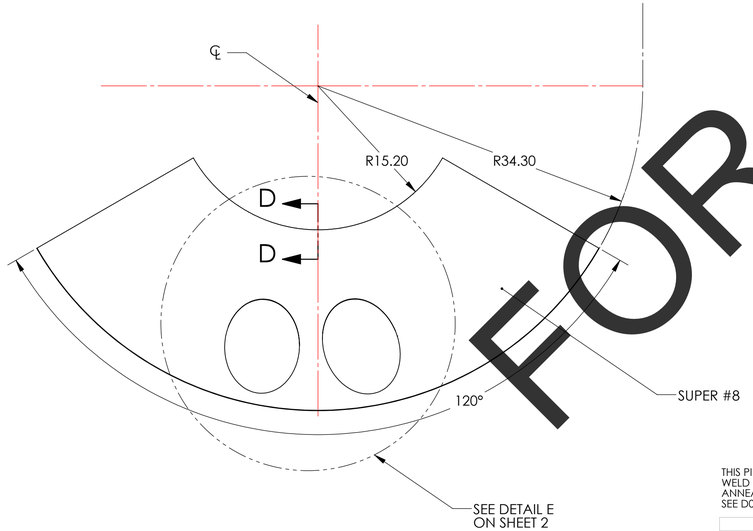

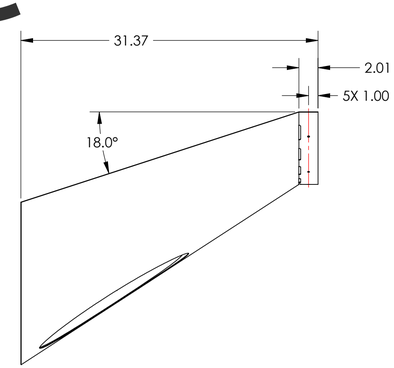

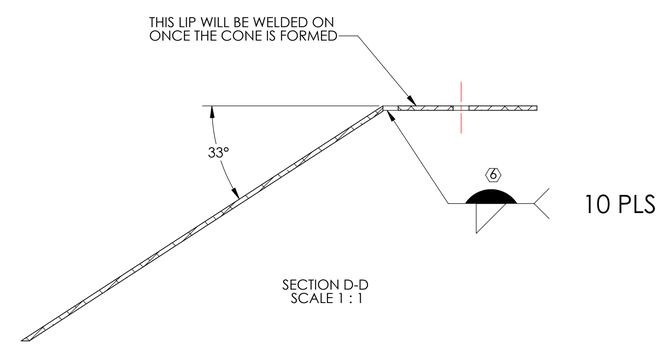

SECTION D-D
SCALE 1 : 1

FOR QUOTE ONLY

THIS PIECE IS PART OF A WELDMENT. DIMENSIONS SHOWN ARE APPROXIMATE; WELD INDUCED SHRINKAGE OR FILL, AND POST WELD ANNEALING AND MACHINING CONSIDERATIONS ARE NOT INCLUDED. SEE D0902654 FOR REQUIRED DIMENSIONS FOR STRUCTURE AFTER WELDMENT.

DIMENSIONS ARE IN INCHES

TOLERANCES:
.XX ± .03
.XXX ± .010

ANGULAR ± 0.5°

NOTES AND TOLERANCES: (UNLESS OTHERWISE SPECIFIED)
1. INTERPRET DRAWING PER ASME Y14.5-1994.
2. REMOVE ALL SHARP EDGES, .005-.015 ON ALL EDGES AND HOLES.
3. DO NOT SCALE FROM DRAWING.
4. ALL MACHINING FLUIDS MUST BE FULLY SYNTHETIC, FULLY WATER SOLUBLE AND FREE OF SULFUR, SILICONE, AND CHLORINE.

MATERIAL 18 GAUGE 304 SSTL
FINISH (10) SUPER #8

LIGO CALIFORNIA INSTITUTE OF TECHNOLOGY
MASSACHUSETTS INSTITUTE OF TECHNOLOGY

SYSTEM ADVANCED LIGO
SUB-SYSTEM AOS
NEXT ASSY D1003229

PART NAME MANIFOLD-CRYO BAFFLE INNER SEGMENT, ETMY H1, BOTTOM

DESIGNER	TQ. NGUYEN	16 DEC 2010
DRAFTER	TQ. NGUYEN	17 AUG 2010
CHECKER	M. SMITH	
APPROVAL	D. COYNE	

SIZE D **DWG. NO.** D1003230 **REV.** v2
SCALE: 1:8 **PROJECTION:** SHEET 1 OF 2

D1003230 ol/LIGO_Manifold_Cryo_Baffle_Inner_Segment_ETMX H1_Bottom_PART PDM REV_X-017_DRAWING PDM REV_X-007

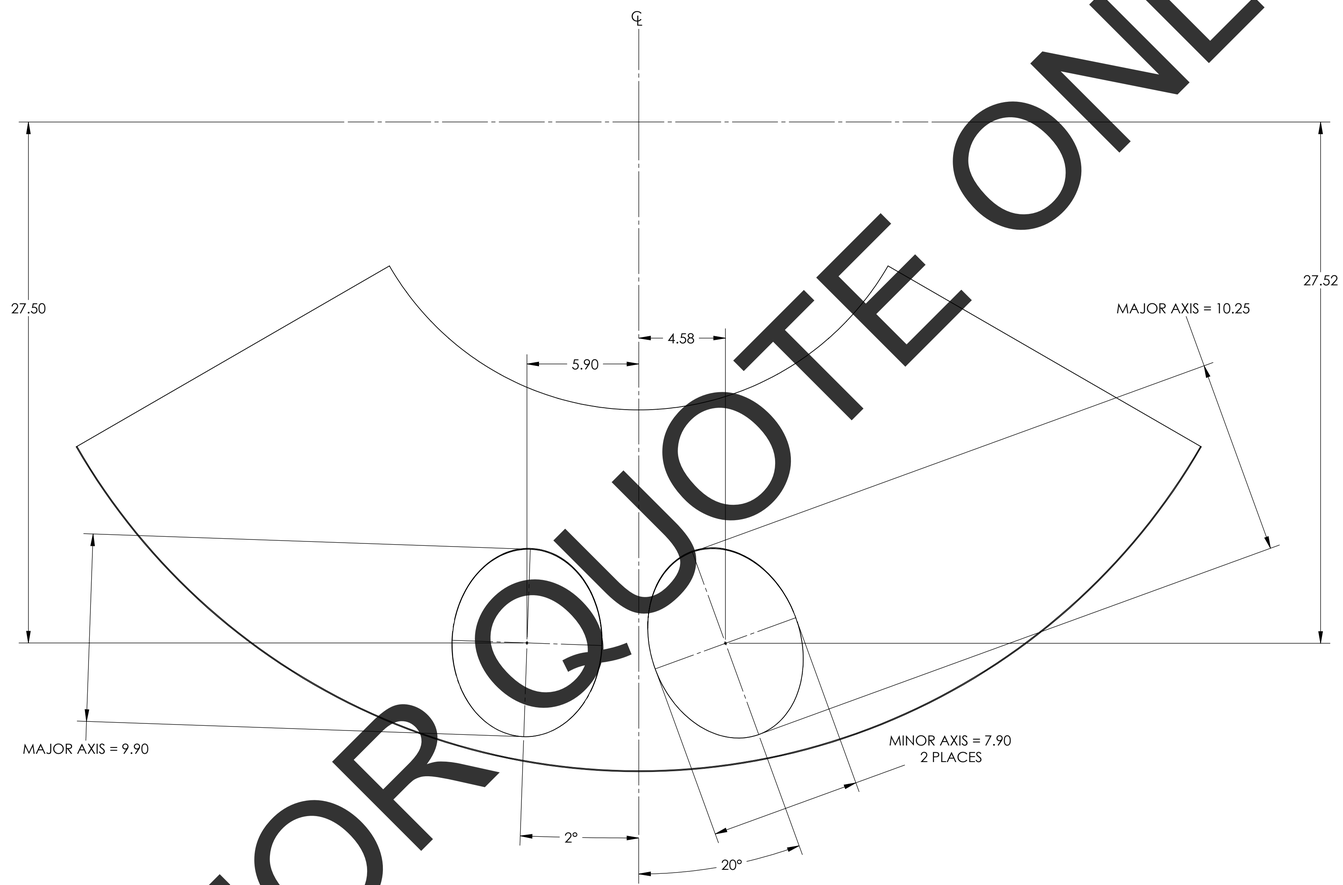

DETAIL E
SCALE 1 : 4

FOR QUOTE ONLY

LIGO
CALIFORNIA INSTITUTE OF TECHNOLOGY
MASSACHUSETTS INSTITUTE OF TECHNOLOGY

SIZE	DWG. NO.	REV.
D	D1003230	v2
SCALE: 1:8	PROJECTION:	SHEET 2 OF 2

D1003230 aLIGO_Manifold_Cryo_Baffle_Inner_Segment, ETMX H1_Bottom_PART PDM REV:X-017, DRAWING PDM REV:X-007

NOTES CONTINUED:

⑤ SCRIBE, ENGRAVE (A VIBRATORY TOOL MAY BE USED), LASER MARK (NO INKS OR DYES) DRAWING PART NUMBER, REVISION (AND VARIENT OR "TYPE" IF APPLICABLE) ON NOTED SURFACE OF PART FOLLOWED ON THE NEXT LINE WITH A THREE DIGIT SERIAL NUMBER. SERIAL NUMBERS START AT 001 FOR THE FIRST ARTICLE AND PROCEED CONSECUTIVELY. USE MINIMUM 0.12" HIGH CHARACTERS, UNLESS THE SIZE OF THE PART DICTATES SMALLER CHARACTERS.
EXAMPLE: DXXXXXXX-VY, TYPE-XX, S/N XXX
DO NOT APPLY MARK ON SUPER #8 SIDE

6. ASSEMBLY TO BE OXIDIZED AFTER WELDMENT IS COMPLETED PER SPECIFICATION E1000083

⑦ FILLET WELDS WHERE ITEMS MAKE CONTACT. WELDING MUST BE PER SPECIFICATION E0900048

REV.	DATE	DCN #	DRAWING TREE #
v1	29 JUL 2011	E1000360-v2	-
v2	17 OCT 2011	E1000360-v3	

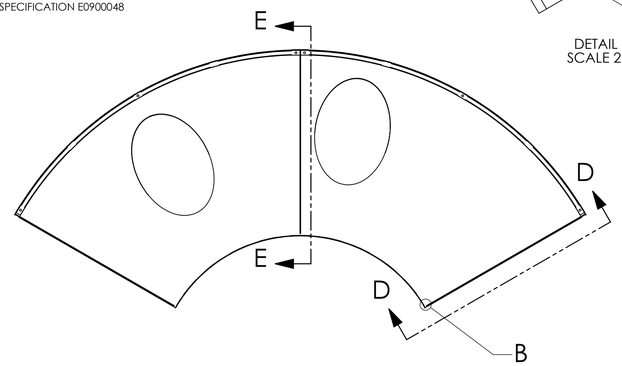

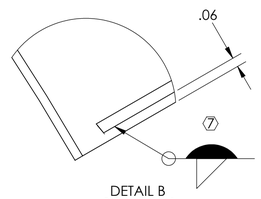

DETAIL B
SCALE 2 : 1

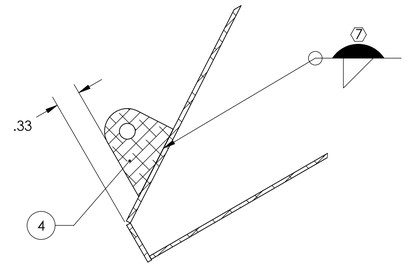

SECTION C-C
SCALE 1 : 1

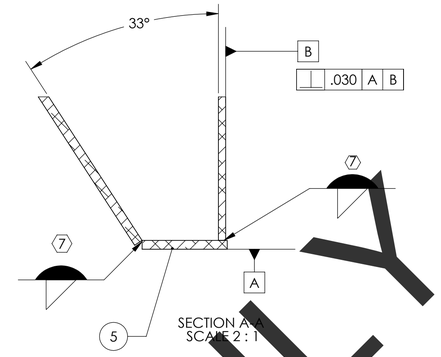

SECTION A-A
SCALE 2 : 1

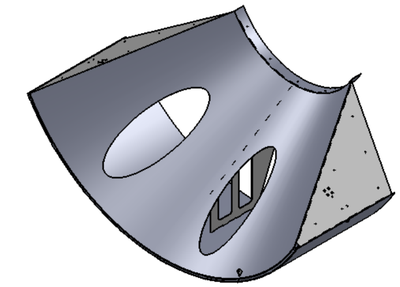

GENERAL VIEW
FOR REFERENCE ONLY
NO SCALE

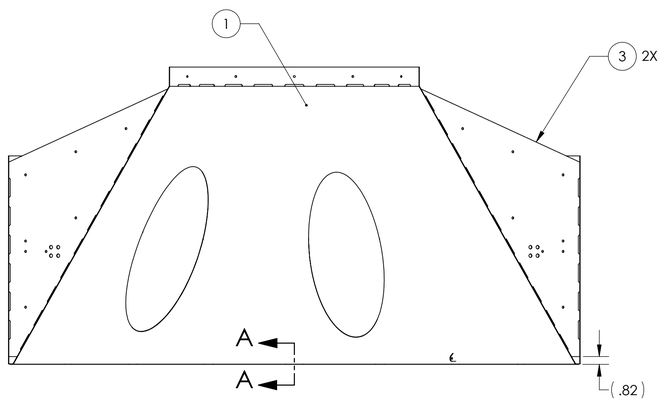

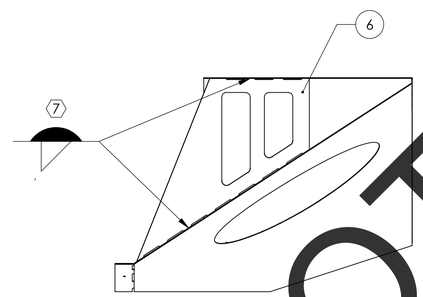

SECTION E-E

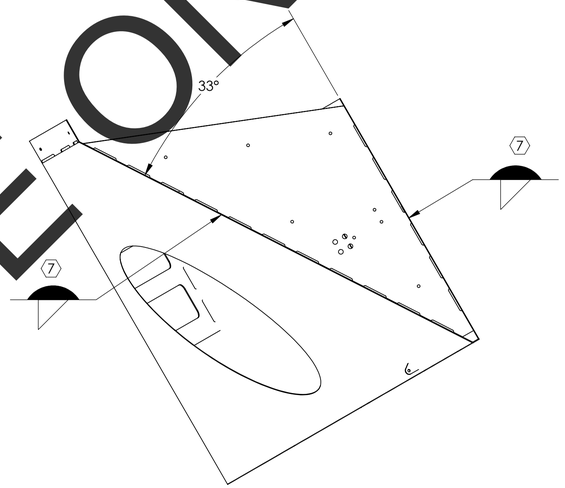

SECTION D-D
SCALE 1 : 6

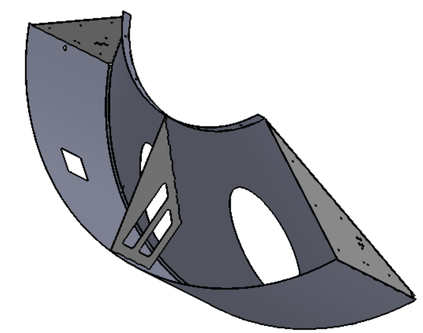

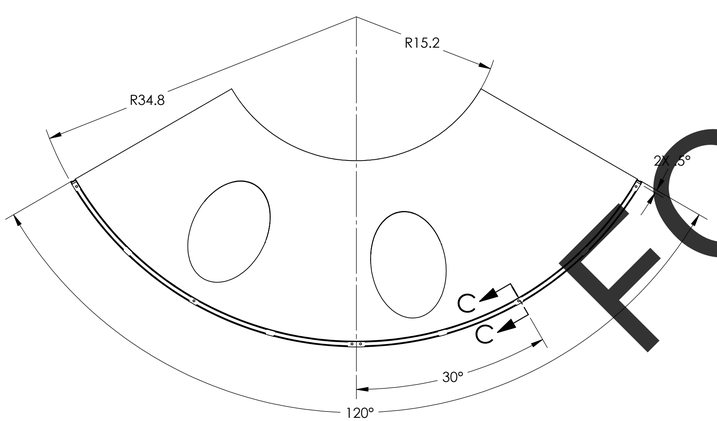

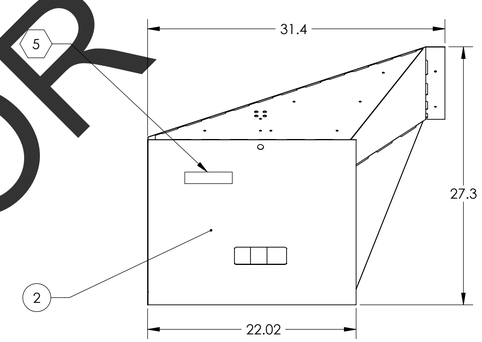

ITEM NO.	PART NUMBER	DESCRIPTION	MATERIAL	QTY.	SPARE	TOTAL
6	D1002849	MANIFOLD CRYO BAFFLE WELDMENT BRACE	14 GAUGE 304 SSTL	1		0
5	D1000559	RADIAL SEGMENT, RIGHT	18 GAUGE 304 SSTL	1		0
4	D1001073	RADIAL ATTACHMENT NUT PLATE	14 GAUGE 304 SSTL	1		0
3	D1000536	BAFFLE BRACE BRACKET	14 GAUGE 304 SSTL	1		0
2	D0902621	MANIFOLD CRYO BAFFLE BRACKET	14 GAUGE 304 SSTL	2		0
1	D1003232	MANIFOLD-CRYO BAFFLE INNER SEGMENT WELDMENT, ETMY H1, RIGHT	18 GAUGE 304 SSTL	1		0

PARTS LIST

NOTES AND TOLERANCES: (UNLESS OTHERWISE SPECIFIED)

DIMENSIONS ARE IN INCHES

TOLERANCES:
.X ± .1
.XX ± .06
.XXX ± .010

ANGULAR ± 1.0°

1. INTERPRET DRAWING PER ASME Y14.5-1994.
2. REMOVE ALL SHARP EDGES, R.02 MIN.
3. DO NOT SCALE FROM DRAWING.
4. ALL MACHINING FLUIDS MUST BE FULLY SYNTHETIC, FULLY WATER SOLUBLE AND FREE OF SULFUR, SILICONE, AND CHLORINE.

MATERIAL: N/A
FINISH: N/A

LIGO CALIFORNIA INSTITUTE OF TECHNOLOGY MASSACHUSETTS INSTITUTE OF TECHNOLOGY

SYSTEM: ADVANCED LIGO
SUB-SYSTEM: AOS
NEXT ASSY: D1003227

PART NAME: MANIFOLD CRYO BAFFLE SEGMENT SUBASSEMBLY WELDMENT, ETMY H1, RIGHT

DESIGNER	TQ .NGUYEN	16 DEC 2010
DRAFTER	TQ. NGUYEN	29 SEP 2011
CHECKER	M. SMITH	
APPROVAL	D. COYNE	

SIZE: D
DWG. NO.: D1003231
REV.: v2
SCALE: 1:8
PROJECTION:
SHEET 1 OF 1

FOR QUOTE ONLY

D1003231_caLIGO_Manifold_Cryo_Baffle_Segment_Subassembly_Weldment_ETMY H1, Right, PART PDM REV: X-005, DRAWING PDM REV: X-002

REV.	DATE	DCN #	DRAWING TREE #
V1	1 SEP 2010	E1000360	E1000091
V2	17 OCT 2011	E1000360-v3	-
-	-	-	-

NOTES CONTINUED:

5. SCRIBE, ENGRAVE (A VIBRATORY TOOL MAY BE USED), LASER MARK (NO INKS OR DYES) DRAWING PART NUMBER, REVISION (AND VARIENT OR "TYPE" IF APPLICABLE) ON NOTED SURFACE OF PART FOLLOWED ON THE NEXT LINE WITH A THREE DIGIT SERIAL NUMBER. SERIAL NUMBERS START AT 001 FOR THE FIRST ARTICLE AND PROCEED CONSECUTIVELY. USE MINIMUM 0.12" HIGH CHARACTERS, UNLESS THE SIZE OF THE PART DICTATES SMALLER CHARACTERS.
   EXAMPLE: DXXXXXXX-VY, TYPE-XX, S/N XXX
   DO NOT APPLY MARK ON SUPER #8 SIDE

6. CONE AND LIP TO BE WELDED WHERE PIECES MAKE CONTACT. WELD MUST BE PER SPECIFICATION E900048.

7. SURFACE FINISH TO BE AS-PROCESSED FROM MILL/SUPPLIER, FREE FROM SCRATCHES OR GOUGES.

8. ALL PARTS SHALL BE MANUFACTURED IN ACCORDANCE WITH LIGO SPECIFICATION E0900364.

9. ALL MATERIAL IS TO BE VIRGIN MATERIAL (i.e. NO WELD REPAIRS, PLUGS OR RECYCLED MATERIAL). NO REPAIRS SHALL BE MADE UNLESS APPROVED IN ADVANCE, AND IN WRITING, BY LIGO LABORATORY. REFER TO LIGO-E0900364.

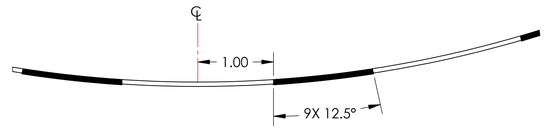

SECTION B-B
SCALE 1 : 1

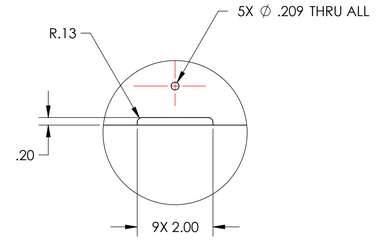

DETAIL D
SCALE 1 : 2

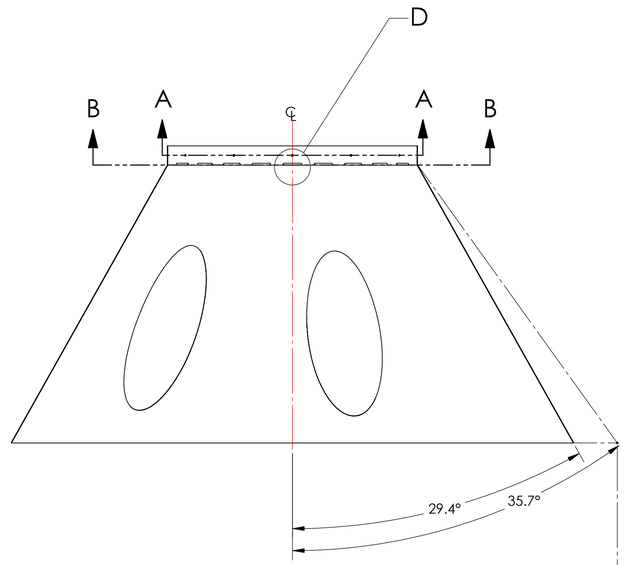

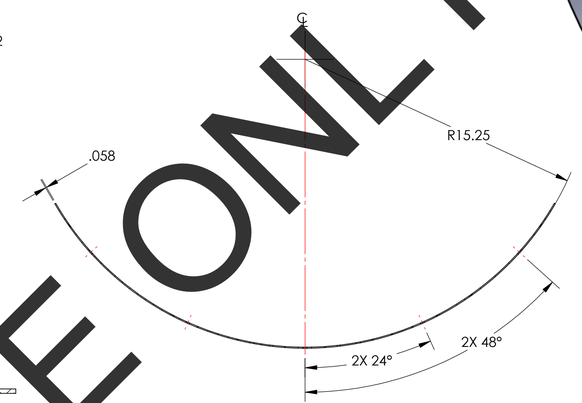

SECTION A-A
SCALE 1 : 4

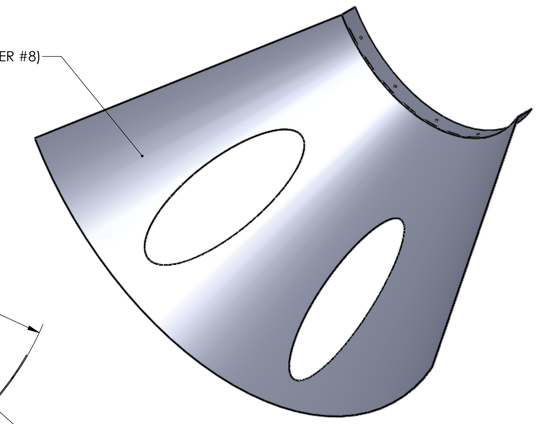

GENERAL VIEW
FOR REFERENCE
NO SCALE

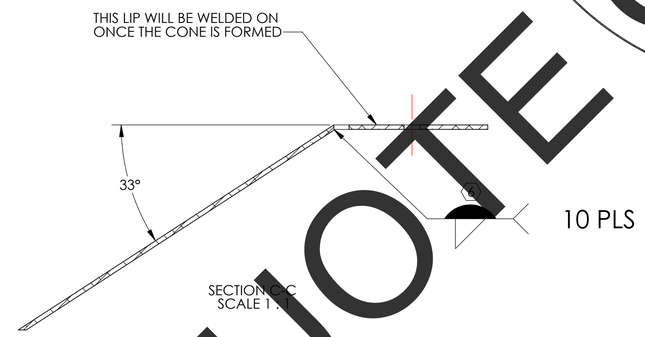

SECTION C-C
SCALE 1 : 1

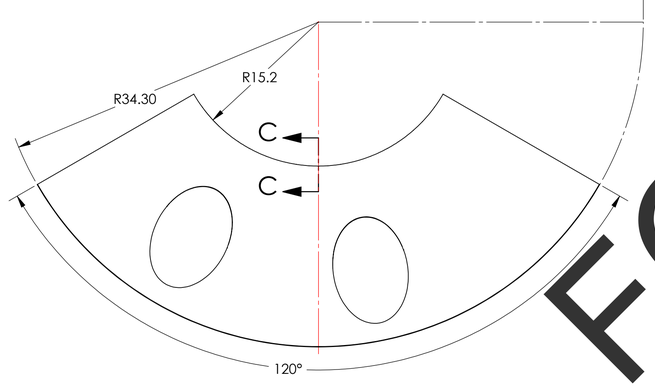

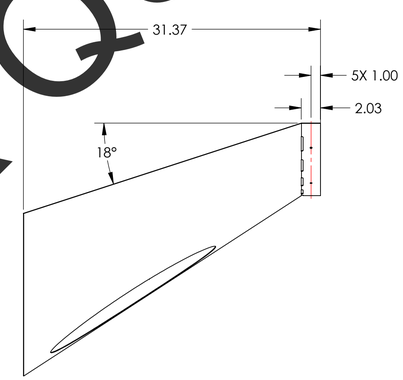

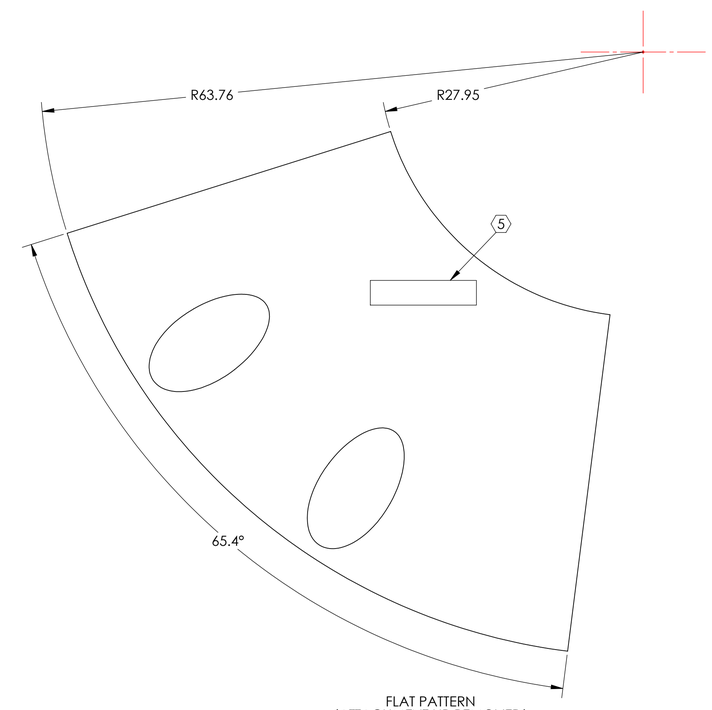

FLAT PATTERN
(ATTACHMENT LIP REMOVED)

FOR QUOTE ONLY

THIS PIECE IS PART OF A WELDMENT. DIMENSIONS SHOWN ARE APPROXIMATE; WELD INDUCED SHRINKAGE OR FILL, AND POST WELD ANNEALING AND MACHINING CONSIDERATIONS ARE NOT INCLUDED. SEE D0902654 FOR REQUIRED DIMENSIONS FOR STRUCTURE AFTER WELDMENT.

DIMENSIONS ARE IN INCHES

TOLERANCES:
.XX ± .06
.XXX ± .010

ANGULAR ±0.5°

NOTES AND TOLERANCES: (UNLESS OTHERWISE SPECIFIED)
1. INTERPRET DRAWING PER ASME Y14.5-1994.
2. REMOVE ALL SHARP EDGES .005-.015 ON ALL EDGES AND HOLES.
3. DO NOT SCALE FROM DRAWING.
4. ALL MACHINING FLUIDS MUST BE FULLY SYNTHETIC, FULLY WATER SOLUBLE AND FREE OF SULFUR, SILICONE, AND CHLORINE.

MATERIAL 18 GAUGE 304 SSTL
FINISH (7) SUPER #8

LIGO CALIFORNIA INSTITUTE OF TECHNOLOGY
MASSACHUSETTS INSTITUTE OF TECHNOLOGY

SYSTEM ADVANCED LIGO
SUB-SYSTEM AOS
NEXT ASSY D1003231

PART NAME MANIFOLD-CRYO BAFFLE INNER SEGMENT WELDMENT, ETMY H1, RIGHT

DESIGNER	TQ. NGUYEN	16 DEC 2010
DRAFTER	TQ. NGUYEN	17 AUG 2010
CHECKER	M. SMITH	
APPROVAL	D. COYNE	

SIZE D **DWG. NO.** D1003232 **REV.** v2
SCALE: 1:8 **PROJECTION:** SHEET 1 OF 2

D1003232_ol/GO_Manifold_Cryo_Baffle_Inner_Segment.ETMY H1, RIGHT, PART PDM REV: X-004, DRAWING PDM REV: X-003

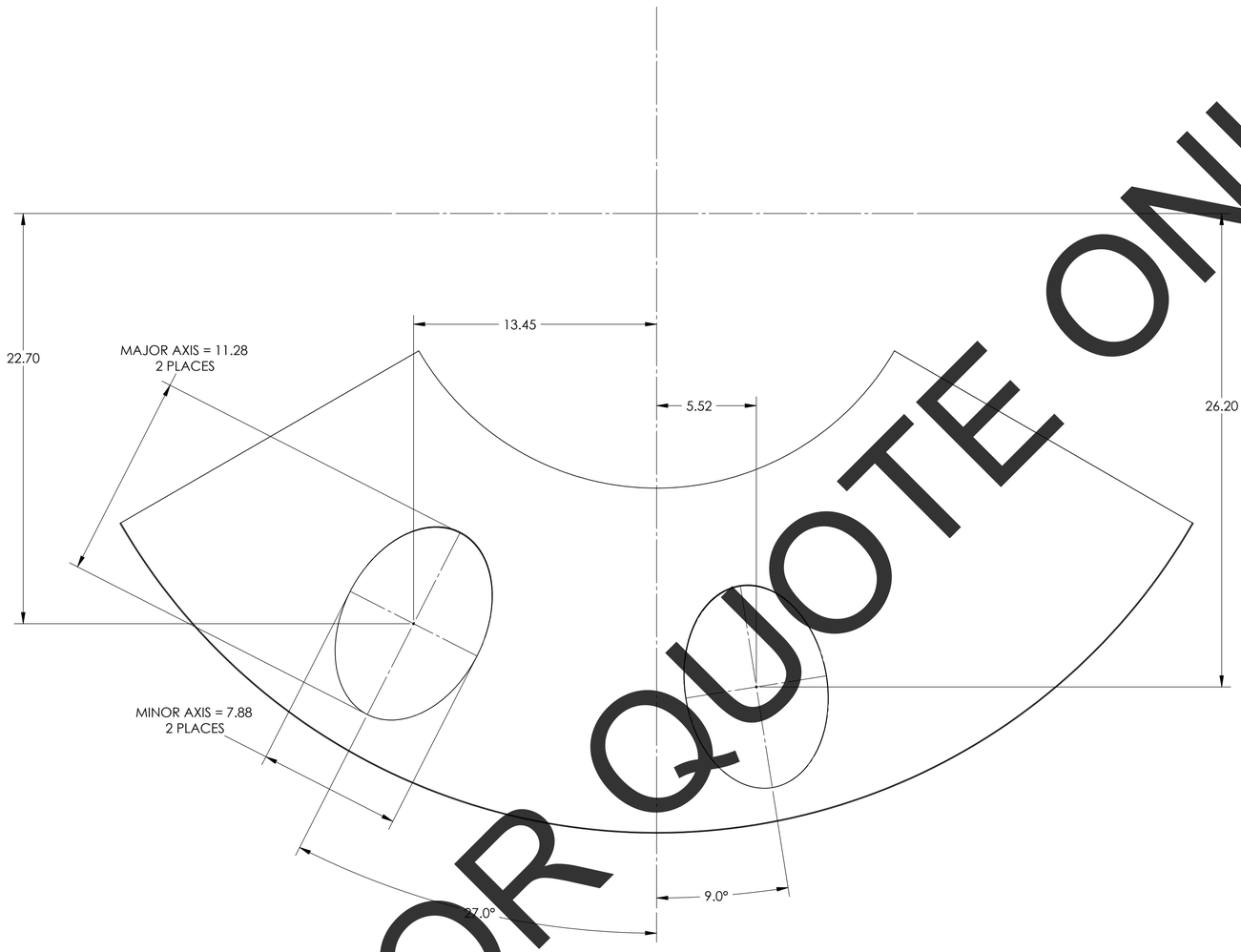

FOR QUOTE ONLY

LIGO CALIFORNIA INSTITUTE OF TECHNOLOGY
MASSACHUSETTS INSTITUTE OF TECHNOLOGY

SIZE	DWG. NO.	REV.
D	D1003232	v2

SCALE: 1:8 PROJECTION: SHEET 2 OF 2

D1003232_aLIGO_Manifold_Cryo_Baffle_Inner_Segment,EMAY H1, RIGHT, PART FDM, REV-X.004, DRAWING FDM, REV-X.003

NOTES CONTINUED:

⑤ SCRIBE, ENGRAVE (A VIBRATORY TOOL MAY BE USED), LASER MARK (NO INKS OR DYES) DRAWING PART NUMBER, REVISION (AND VARIENT OR "TYPE" IF APPLICABLE) ON NOTED SURFACE OF PART FOLLOWED ON THE NEXT LINE WITH A THREE DIGIT SERIAL NUMBER. SERIAL NUMBERS START AT 001 FOR THE FIRST ARTICLE AND PROCEED CONSECUTIVELY. USE MINIMUM 0.12" HIGH CHARACTERS, UNLESS THE SIZE OF THE PART DICTATES SMALLER CHARACTERS.
EXAMPLE: DXXXXXXX-VY, TYPE-XX, S/N XXX
DO NOT APPLY MARK ON SUPER #8 SIDE

6. ASSEMBLY TO BE OXIDIZED AFTER WELDMENT IS COMPLETED PER SPECIFICATION E1100842.

⑦ FILLET WELDS WHERE ITEMS MAKE CONTACT. WELDING MUST BE PER SPECIFICATION E0900048.

REV.	DATE	DCN #	DRAWING TREE #
v1	29 JUL 2011	E1000360-v2	-
v2	17 OCT 2011	E1000360-v3	-
-	-	-	-

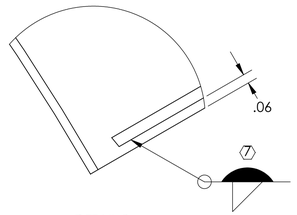

DETAIL B
SCALE 2 : 1

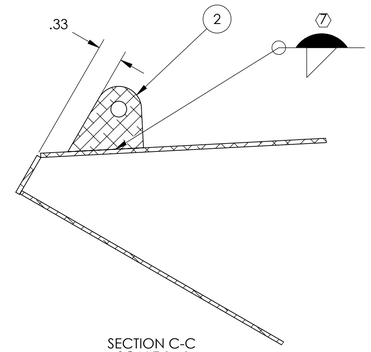

SECTION C-C
SCALE 1 : 1

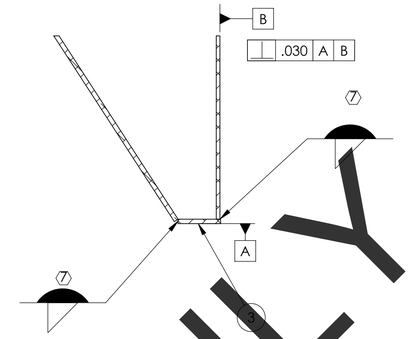

SECTION A-A
SCALE 1 : 1

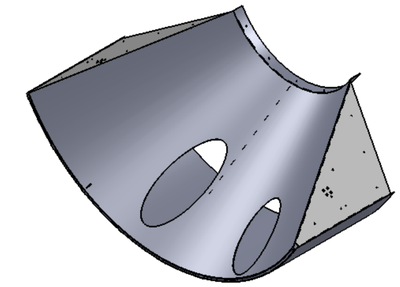

GENERAL VIEW
FOR REFERENCE ONLY
NO SCALE

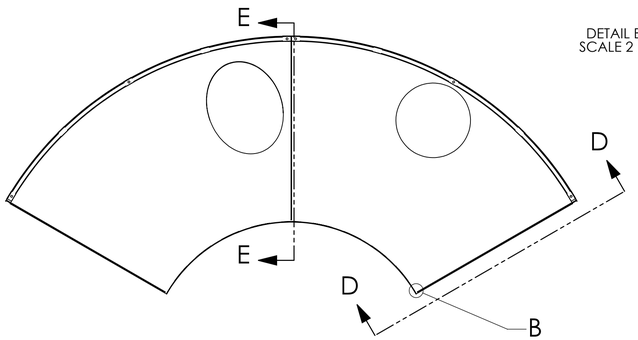

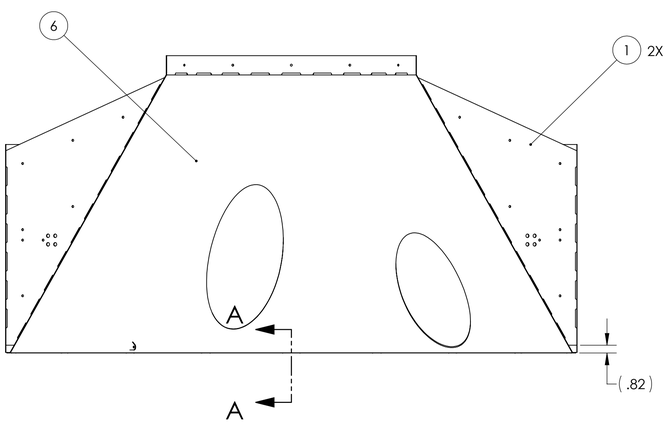

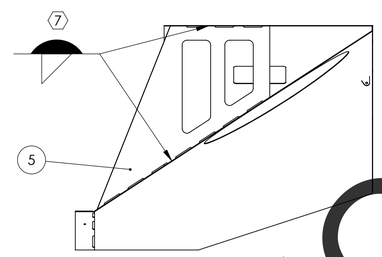

SECTION E-E

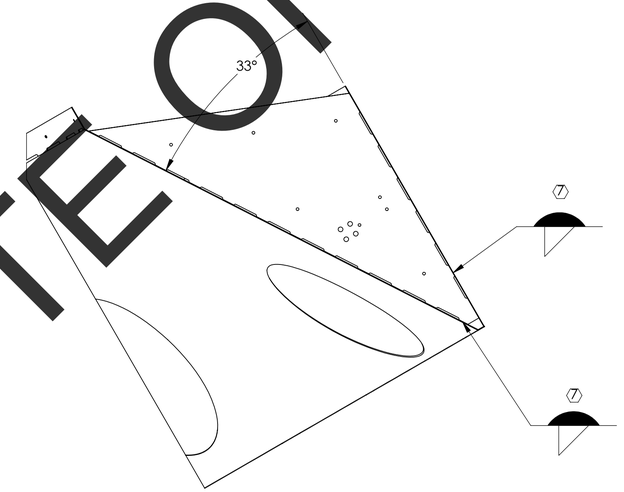

SECTION D-D
SCALE 1 : 6

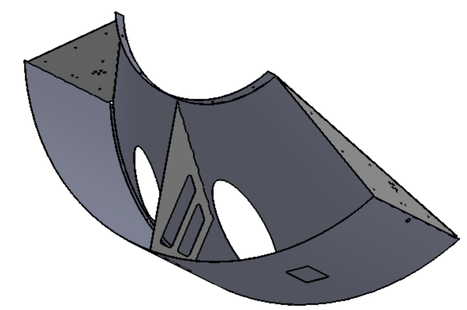

GENERAL VIEW
FOR REFERENCE ONLY
NO SCALE

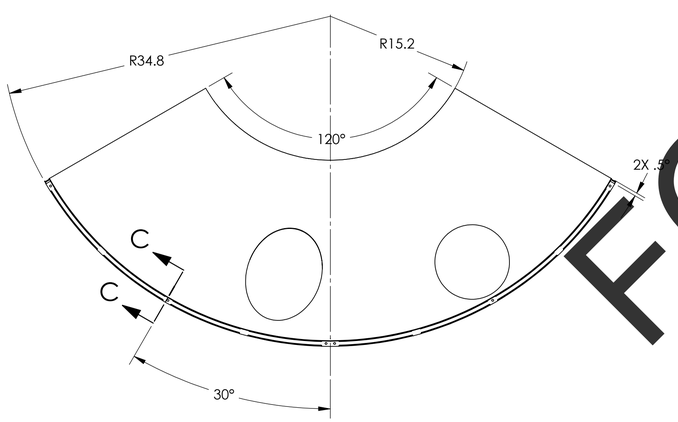

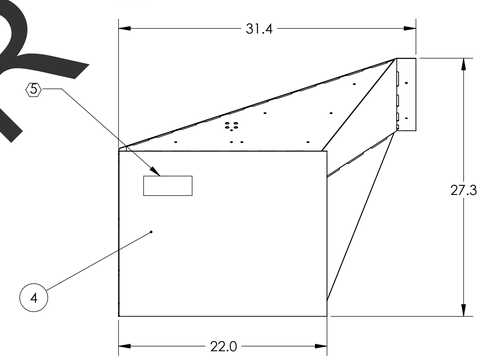

FOR QUOTE ONLY

ITEM NO.	PART NUMBER	DESCRIPTION	MATERIAL	REQ	SPARE	TOTAL
6	D1003234	MANIFOLD-CRYO BAFFLE INNER SEGMENT WELDMENT, ETMY H1, LEFT	18 GAUGE 304 SSTL	1		1
5	D1002849	MANIFOLD CRYO BAFFLE WELDMENT BRACE	14 GAUGE 304 SSTL	1		1
4	D1000558	RADIAL SEGMENT, LEFT	18 GAUGE 304 SSTL	1		1
3	D1001073	RADIAL ATTACHMENT NUT PLATE	14 GAUGE 304 SSTL	1		1
2	D1000536	BAFFLE BRACE BRACKET	14 GAUGE 304 SSTL	1		1
1	D0902621	MANIFOLD CRYO BAFFLE BRACKET	14 GAUGE 304 SSTL	2		2

PARTS LIST

DIMENSIONS ARE IN INCHES

TOLERANCES:
.X ± .1
.XX ± .06
.XXX ± .010

ANGULAR ± 1.0°

NOTES AND TOLERANCES: (UNLESS OTHERWISE SPECIFIED)

1. INTERPRET DRAWING PER ASME Y14.5-1994.
2. REMOVE ALL SHARP EDGES .005-.015 ON ALL EDGES AND HOLES.
3. DO NOT SCALE FROM DRAWING.
4. ALL MACHINING FLUIDS MUST BE FULLY SYNTHETIC, FULLY WATER SOLUBLE AND FREE OF SULFUR, SILICONE, AND CHLORINE.

MATERIAL N/A

FINISH N/A

LIGO CALIFORNIA INSTITUTE OF TECHNOLOGY
MASSACHUSETTS INSTITUTE OF TECHNOLOGY

SYSTEM ADVANCED LIGO

SUB-SYSTEM AOS

NEXT ASSY D1003227

PART NAME MANIFOLD-CRYO BAFFLE SEGMENT SUBASSEMBLY WELDMENT, ETMY H1, LEFT

DESIGNER	TQ. NGUYEN	16 DEC 2010
DRAFTER	TQ. NGUYEN	07 SEP 2010
CHECKER	M. SMITH	
APPROVAL	D. COYNE	

SIZE D **DWG. NO.** D1003233 **REV.** v2

SCALE: 1:8 **PROJECTION:** SHEET 1 OF 1

D1003233_ALIGO_Manifold_Cryo_Baffle_Segment_Subassembly_Weldment_ETMY H1_LEFT, PART FDM REV: X-006, DRAWING FDM REV: X-002

REV.	DATE	DCN #	DRAWING TREE #
V1	07 SEP 2010	E1000360	E1000090
V2	17 OCT 2011	E1000360-v3	-
v3	31 OCT 2012	-	-

NOTES CONTINUED:

5. SCRIBE, ENGRAVE (A VIBRATORY TOOL MAY BE USED), LASER MARK (NO INKS OR DYES) DRAWING PART NUMBER, REVISION (AND VARIENT OR "TYPE" IF APPLICABLE) ON NOTED SURFACE OF PART FOLLOWED ON THE NEXT LINE WITH A THREE DIGIT SERIAL NUMBER. SERIAL NUMBERS START AT 001 FOR THE FIRST ARTICLE AND PROCEED CONSECUTIVELY. USE MINIMUM 0.12" HIGH CHARACTERS, UNLESS THE SIZE OF THE PART DICTATES SMALLER CHARACTERS.
EXAMPLE: DXXXXXXX-VY, TYPE-XX, S/N XXX
DO NOT APPLY MARK ON SUPER #8 SIDE

6. CONE AND LIP TO BE WELDED WHERE PIECES MAKE CONTACT. WELD MUST BE PER SPECIFICATION E900048.

7. SURFACE FINISH TO BE AS-PROCESSED FROM MILL/SUPPLIER, FREE FROM SCRATCHES OR GOUGES.

8. ALL PARTS SHALL BE MANUFACTURED IN ACCORDANCE WITH LIGO SPECIFICATION E0900364.

9. ALL MATERIAL IS TO BE VIRGIN MATERIAL (i.e. NO WELD REPAIRS, PLUGS OR RECYCLED MATERIAL). NO REPAIRS SHALL BE MADE UNLESS APPROVED IN ADVANCE, AND IN WRITING, BY LIGO LABORATORY. REFER TO LIGO-E0900364.

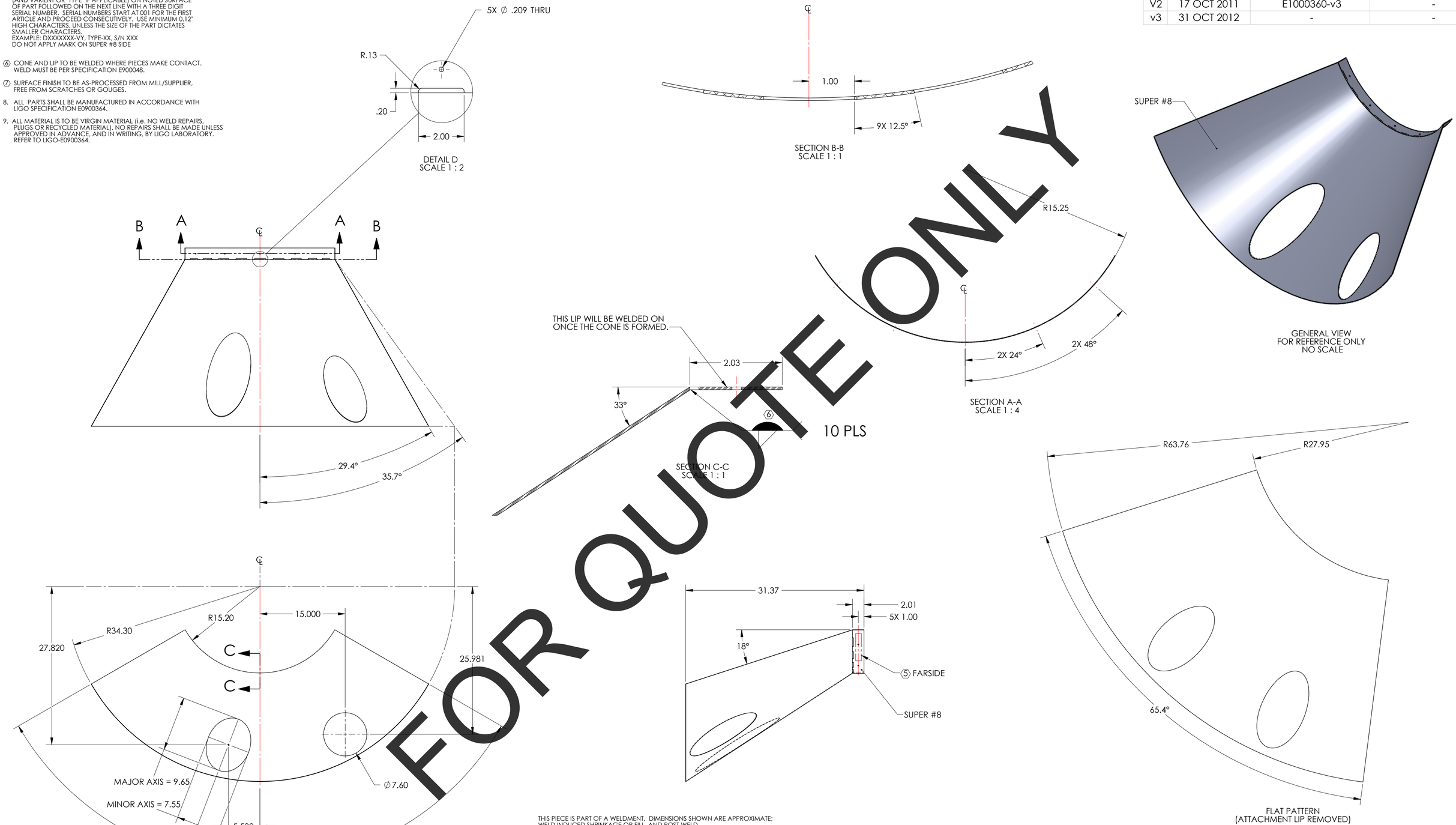

FOR QUOTE ONLY

THIS PIECE IS PART OF A WELDMENT. DIMENSIONS SHOWN ARE APPROXIMATE; WELD INDUCED SHRINKAGE OR FILL, AND POST WELD ANNEALING AND MACHINING CONSIDERATIONS ARE NOT INCLUDED. SEE D0902656 FOR REQUIRED DIMENSIONS FOR STRUCTURE AFTER WELDMENT.

DIMENSIONS ARE IN INCHES

TOLERANCES:
.XX ± .06
.XXX ± .010

ANGULAR ± 0.5°

NOTES AND TOLERANCES: (UNLESS OTHERWISE SPECIFIED)

1. INTERPRET DRAWING PER ASME Y14.5-1994.
2. REMOVE ALL SHARP EDGES, R.02 MIN.
3. DO NOT SCALE FROM DRAWING.
4. ALL MACHINING FLUIDS MUST BE FULLY SYNTHETIC, FULLY WATER SOLUBLE AND FREE OF SULFUR, SILICONE, AND CHLORINE.

MATERIAL 18 GAUGE 304 SSTL

FINISH 7 SUPER #8

LIGO CALIFORNIA INSTITUTE OF TECHNOLOGY
MASSACHUSETTS INSTITUTE OF TECHNOLOGY

SYSTEM ADVANCED LIGO

SUB-SYSTEM AOS

NEXT ASSY D1003233

PART NAME MANIFOLD-CRYO BAFFLE INNER SEGMENT WELDMENT, ETMY H1, LEFT

DESIGNER	TQ. NGUYEN	16 DEC 2010
DRAFTER	TQ. NGUYEN	17 AUG 2010
CHECKER	M. SMITH	
APPROVAL	D. COYNE	

SIZE D **DWG. NO.** D1003234 **REV.** v3

SCALE: 1:8 **PROJECTION:** **SHEET 1 OF 1**

D1003234_aLIGO_Manifold_Cryo_Baffle_Inner_Segment_ETMY H1_LEFT_PART PDM REV-X-018, DRAWING PDM REV-X-013

REV.	DATE	DCN #	DRAWING TREE #
v1	27 JUL 2011	E1000360-v2	-
v2	30 OCT 2012	E1000360-v3	-
		-	-

NOTES CONTINUED:

5. SCRIBE, ENGRAVE (A VIBRATORY TOOL MAY BE USED), LASER MARK (NO INKS OR DYES) DRAWING PART NUMBER, REVISION (AND VARIENT OR "TYPE" IF APPLICABLE) ON NOTED SURFACE OF PART FOLLOWED ON THE NEXT LINE WITH A THREE DIGIT SERIAL NUMBER. SERIAL NUMBERS START AT 001 FOR THE FIRST ARTICLE AND PROCEED CONSECUTIVELY. USE MINIMUM 0.12" HIGH CHARACTERS, UNLESS THE SIZE OF THE PART DICTATES SMALLER CHARACTERS.
EXAMPLE: DXXXXXXX-VY, TYPE-XX, S/N XXX
DO NOT APPLY MARK ON SUPER #8 SIDE

6. APPROXIMATE WEIGHT = 10.974 LBS

7. ALL PARTS SHALL BE MANUFACTURED IN ACCORDANCE WITH LIGO SPECIFICATION E0900364.

8. ALL MATERIAL IS TO BE VIRGIN MATERIAL (i.e. NO WELD REPAIRS, PLUGS OR RECYCLED MATERIAL). NO REPAIRS SHALL BE MADE UNLESS APPROVED IN ADVANCE, AND IN WRITING, BY LIGO LABORATORY. REFER TO LIGO-E0900364.

9. PART TO BE OXIDIZED PER LIGO SPECIFICATION E1100842.

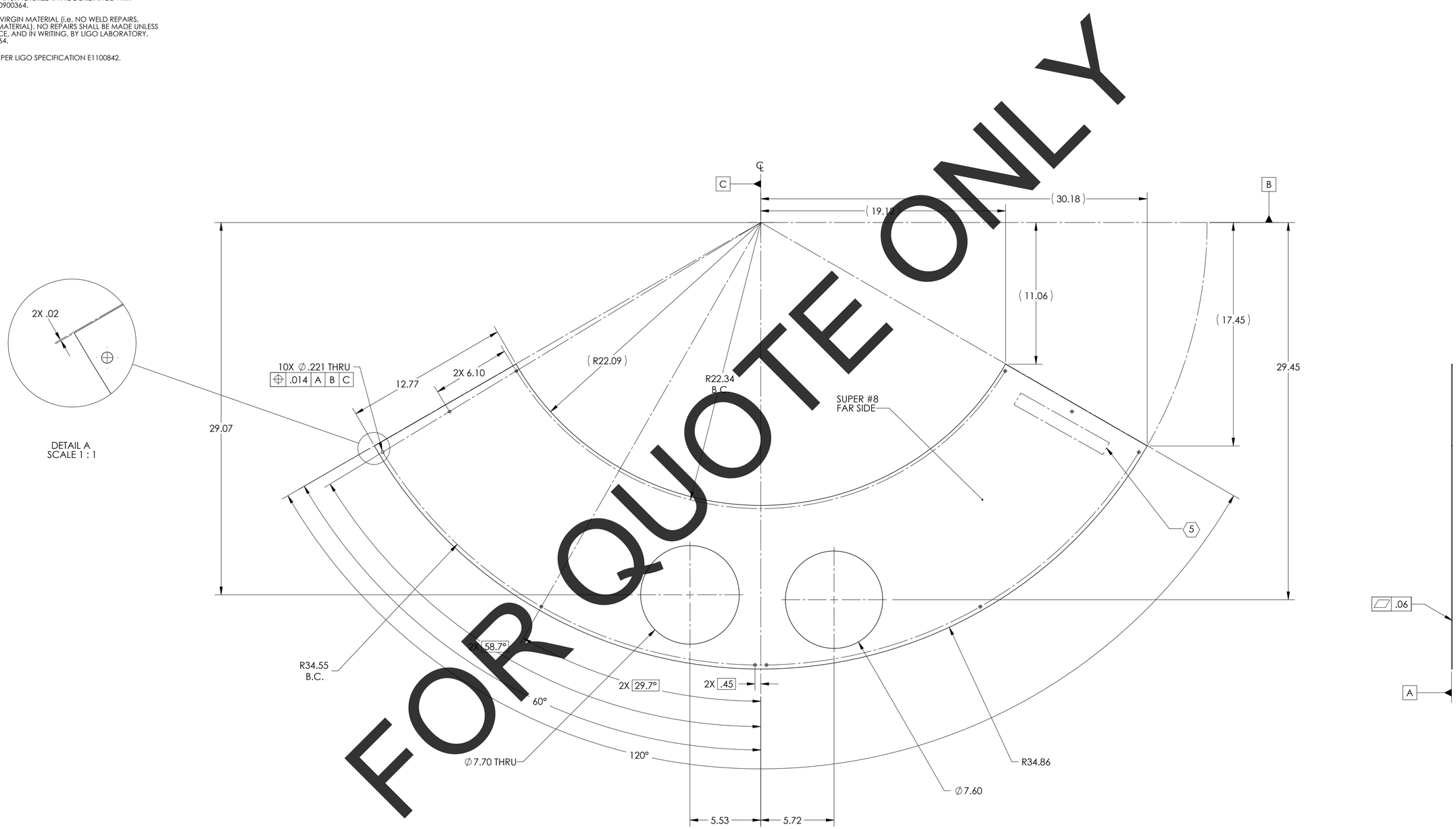

DIMENSIONS ARE IN INCHES TOLERANCES: .XX ± .03 .XXX ± ANGULAR ± 0.5°	NOTES AND TOLERANCES: (UNLESS OTHERWISE SPECIFIED) 1. INTERPRET DRAWING PER ASME Y14.5-1994. 2. REMOVE ALL SHARP EDGES,AND BURRS AND ROUND EDGES. FULL RADIUS ON ALL EDGES AND HOLES. 3. DO NOT SCALE FROM DRAWING. 4. ALL MACHINING FLUIDS MUST BE FULLY SYNTHETIC, FULLY WATER SOLUBLE AND FREE OF SULFUR, SILICONE, AND CHLORINE.	LIGO CALIFORNIA INSTITUTE OF TECHNOLOGY MASSACHUSETTS INSTITUTE OF TECHNOLOGY	PART NAME: LOWER FACE PLATE, ETM X
	MATERIAL: 18 GAUGE 304 SSTL FINISH: SUPER #8 (9)	SYSTEM: ADVANCED LIGO SUB-SYSTEM: AOS NEXT ASSY: D1003183	DESIGNER: TQ. NGUYEN 27 JUL 2011 DRAFTER: TQ. NGUYEN 27 JUL 2011 CHECKER: M. SMITH APPROVAL: C. TORRES
			SIZE: D DWG. NO.: D1101502 REV.: v2 SCALE: 1:4 PROJECTION: SHEET 1 OF 1

D1101502_aLIGO_Manifold_Cryo_Baffle_Lower_Face_Plate_ETM XY, PART FDM REV: X-016, DRAWING FDM REV: X-012

REV.	DATE	DCN #	DRAWING TREE #
v1	29 OCT 2012	E1000360-v3	-
-	-	-	-
-	-	-	-

NOTES CONTINUED:

(5) SCRIBE, ENGRAVE (A VIBRATORY TOOL MAY BE USED), LASER MARK (NO INKS OR DYES) DRAWING PART NUMBER, REVISION (AND VARIENT OR "TYPE" IF APPLICABLE) ON NOTED SURFACE OF PART FOLLOWED ON THE NEXT LINE WITH A THREE DIGIT SERIAL NUMBER. SERIAL NUMBERS START AT 001 FOR THE FIRST ARTICLE AND PROCEED CONSECUTIVELY. USE MINIMUM 0.12" HIGH CHARACTERS, UNLESS THE SIZE OF THE PART DICTATES SMALLER CHARACTERS.
EXAMPLE: DXXXXXXX-VY, TYPE-XX, S/N XXX
DO NOT APPLY MARK ON SUPER #8 SIDE

6. APPROXIMATE WEIGHT = 10.958 LBS.

7. ALL PARTS SHALL BE MANUFACTURED IN ACCORDANCE WITH LIGO SPECIFICATION E0900364.

8. ALL MATERIAL IS TO BE VIRGIN MATERIAL (i.e. NO WELD REPAIRS, PLUGS OR RECYCLED MATERIAL). NO REPAIRS SHALL BE MADE UNLESS APPROVED IN ADVANCE, AND IN WRITING, BY LIGO LABORATORY. REFER TO LIGO-E0900364.

(9) PART TO BE OXIDIZED PER LIGO SPECIFICATION E1100842.

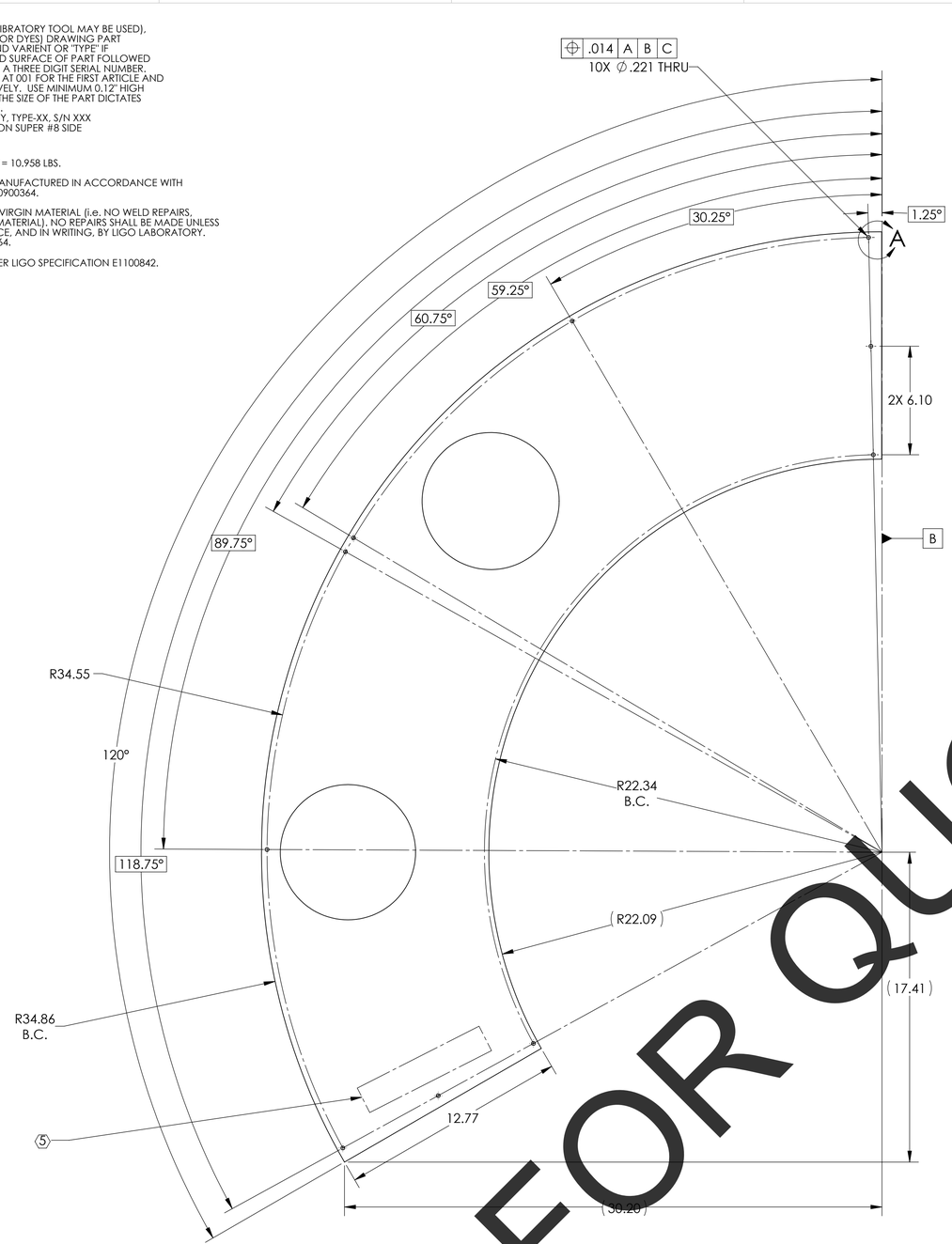

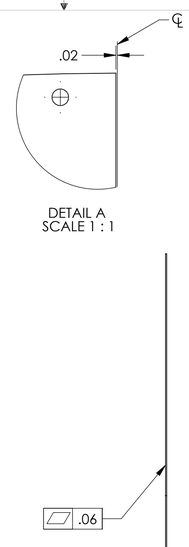

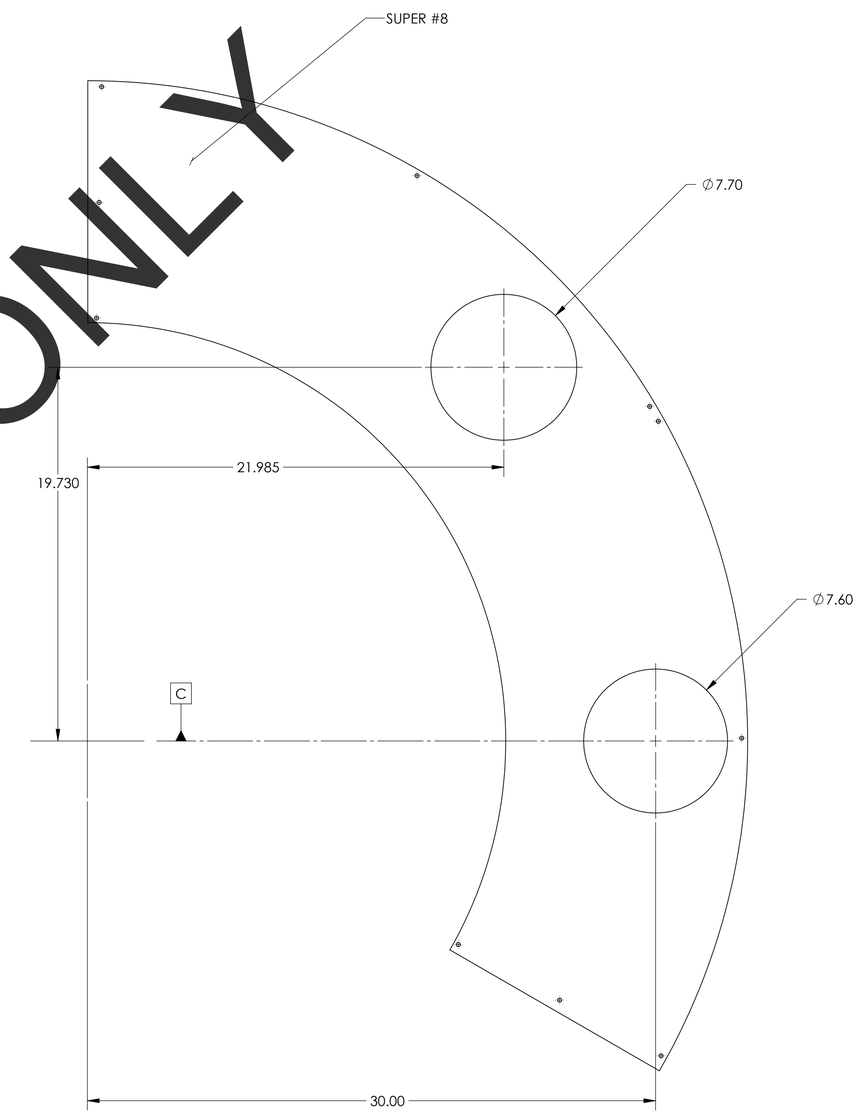

FOR QUOTE ONLY

NOTES AND TOLERANCES: (UNLESS OTHERWISE SPECIFIED)

DIMENSIONS ARE IN INCHES

TOLERANCES:
.XX ± .03
.XXX ± .010

ANGULAR ± 0.5°

1. INTERPRET DRAWING PER ASME Y14.5-1994.
2. REMOVE ALL SHARP EDGES, .005-.015. FOR MACHINED PARTS. ROUND ALL EDGES APPROXIMATLEY R.02 FOR SHEET METAL PARTS.
3. DO NOT SCALE FROM DRAWING.
4. ALL MACHINING FLUIDS AUST BE FULLY SYNTHETIC, FULLY WATER SOLUBLE AND FREE OF SULFUR, SILICONE, AND CHLORINE.

MATERIAL: 18 GAUGE 304 SSTL

FINISH: SUPER #8 (9)

LIGO — CALIFORNIA INSTITUTE OF TECHNOLOGY, MASSACHUSETTS INSTITUTE OF TECHNOLOGY

SYSTEM: ADVANCED LIGO

SUB-SYSTEM: AOS

NEXT ASSY: D1003227

PART NAME: LEFT HALF FACE, ETMY

DESIGNER	TQ. NGUYEN	4 APR 2012
DRAFTER	TQ. NGUYEN	3 APR 2012
CHECKER	L. AUSTIN	
APPROVAL	C. TORRIE	

SIZE: D

DWG. NO.: D1200516

REV.: v1

SCALE: 1:4

PROJECTION:

SHEET 1 OF 1

D1200516 aLIGO_Manifold_Cryo_Baffle_Left_Half_Face_Plate ETMY, PART PDM REV: X-008, DRAWING PDM REV: X-006

REV.	DATE	DCN #	DRAWING TREE #
v1	29 OCT 2012	E1000360	-
-	-	-	-
-	-	-	-

NOTES CONTINUED:

5. SCRIBE, ENGRAVE (A VIBRATORY TOOL MAY BE USED), LASER MARK(NO INKS OR DYES) DRAWING PART NUMBERS, REVISION (AND VARIANT OR "TYPE" IF APPLICALBE) ON NOTED SURFACE OF PART FOLLOWED ON THE NEXT LINE WITH A THREE DIGIT SERIAL NUMBERS. SERIAL NUMBERS START AT 001 FOR FIRST ARTICLE AND PROCEED CONSECTIVELY. USE MINIMUM .12" HIGH CHARCTERS, UNLLESS THE SIZE OF THE PART DICTATES SMALLER CHARACTERS. EXAMPLE: DXXXXXXX-VY, TYPEXX, S/N XXX DO NOT APPLY MARK ON SUPER #8 SIDE.

6. APPROXIMATE WEIGHT = 11.074 LBS.

7. ALL PARTS SHALL BE MANUFACTURED IN ACCORDANCE WITH LIGO SPECIFICATION E0900364.

8. ALL MATERIAL IS TO BE VIRGIN MATERIAL (i.e. NO WELD REPAIRS, PLUGS OR RECYCLED MATERIAL). NO REPAIRS SHALL BE MADE UNLESS APPROVED IN ADVANCE, AND IN WRITING, BY LIGO LABORATORY. REFER TO LIGO-E0900364.

9. PART TO BE OXIDIXED PER LIGO SPECIFICATION E1100842.

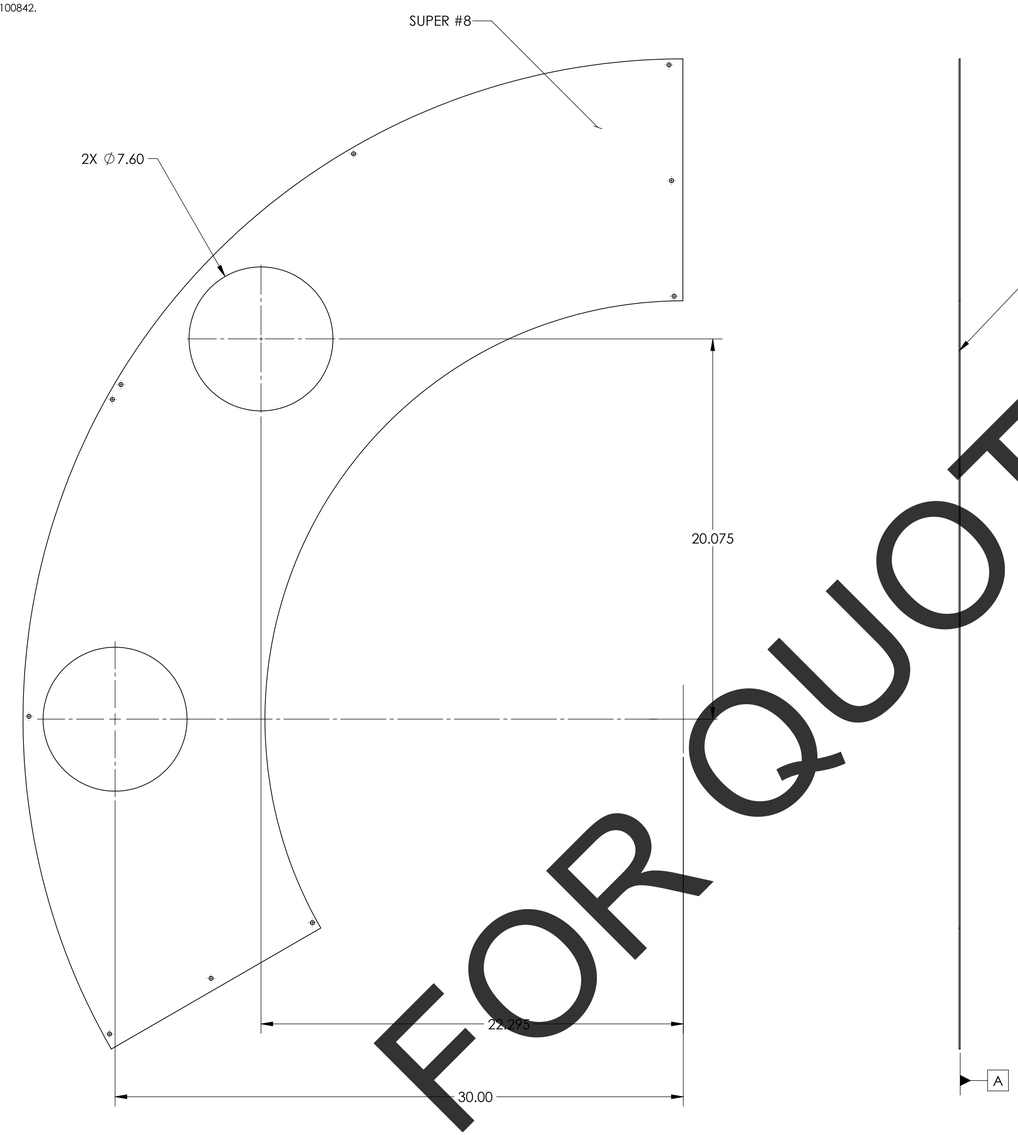

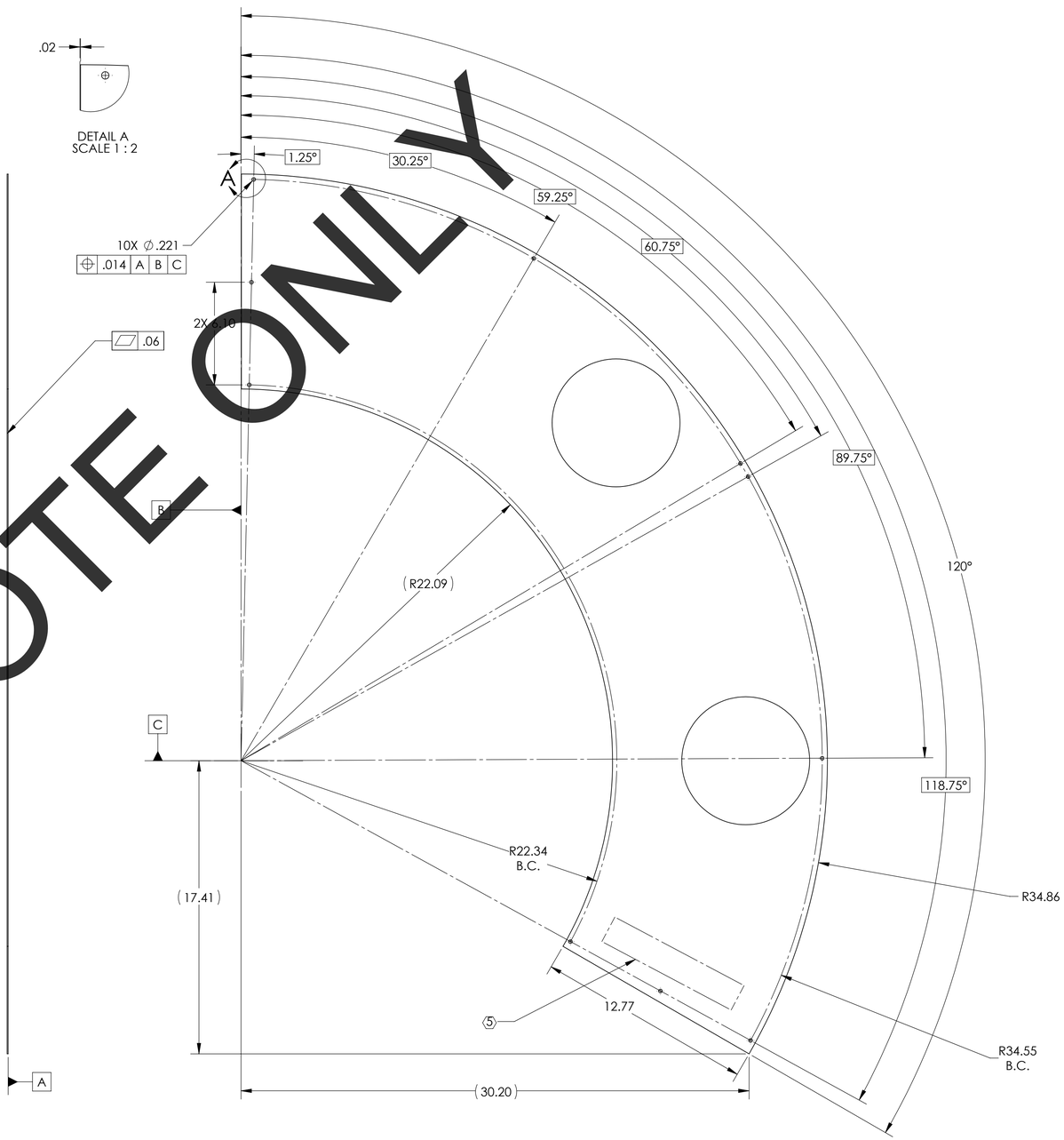

FOR QUOTE ONLY

NOTES AND TOLERANCES: (UNLESS OTHERWISE SPECIFIED)

DIMENSIONS ARE IN INCHES

TOLERANCES:
.XX ± .03
.XXX ± .010

ANGULAR ± 0.5°

1. INTERPRET DRAWING PER ASME Y14.5-1994.
2. REMOVE ALL SHARP EDGES, .005-.015. FOR MACHINED PARTS. ROUND ALL EDGES APPROXIMATLEY R.02 FOR SHEET METAL PARTS.
3. DO NOT SCALE FROM DRAWING.
4. ALL MACHINING FLUIDS MUST BE FULLY SYNTHETIC, FULLY WATER SOLUBLE AND FREE OF SULFUR, SILICONE, AND CHLORINE.

MATERIAL: 18 GAUGE 304 SSTL

FINISH: SUPER #8 9

LIGO — CALIFORNIA INSTITUTE OF TECHNOLOGY, MASSACHUSETTS INSTITUTE OF TECHNOLOGY

SYSTEM: ADVANCED LIGO

SUB-SYSTEM: AOS

NEXT ASSY: D1003227

PART NAME: RIGHT HALF FACE, ETMY

DESIGNER	TQ. NGUYEN	4 APR 2012
DRAFTER	TQ. NGUYEN	4 APR 2012
CHECKER	L. AUSTIN	
APPROVAL	C. TORRIE	

SIZE: D

DWG. NO.: D1200517

REV.: v1

SCALE: 1:4

PROJECTION:

SHEET 1 OF 1

D1200517 aLIGO_Manifold_Cryo_Baffle_Right_Half_Face_Plate_ETMY. PART PDM REV: X-005. DRAWING PDM REV: X-008

REV.	DATE	DCN #	DRAWING TREE #
v1	30 OCT 2012	E1000360-v3	-
-	-	-	-
-	-	-	-

NOTES CONTINUED:

(5) SCRIBE, ENGRAVE (A VIBRATORY TOOL MAY BE USED), LASER MARK (NO INKS OR DYES) DRAWING PART NUMBER, REVISION (AND VARIENT OR "TYPE" IF APPLICABLE) ON NOTED SURFACE OF PART FOLLOWED ON THE NEXT LINE WITH A THREE DIGIT SERIAL NUMBER. SERIAL NUMBERS START AT 001 FOR THE FIRST ARTICLE AND PROCEED CONSECUTIVELY. USE MINIMUM 0.12" HIGH CHARACTERS, UNLESS THE SIZE OF THE PART DICTATES SMALLER CHARACTERS.
EXAMPLE: DXXXXXXX-VY, TYPE-XX, S/N XXX
DO NOT APPLY MARK ON SUPER #8 SIDE.

6. APPROXIMATE WEIGHT = 9.339 LBS.
7. ALL PARTS SHALL BE MANUFACTURED IN ACCORDANCE WITH LIGO SPECIFICATION E0900364.
8. ALL MATERIAL IS TO BE VIRGIN MATERIAL (i.e. NO WELD REPAIRS, PLUGS OR RECYCLED MATERIAL). NO REPAIRS SHALL BE MADE UNLESS APPROVED IN ADVANCE, AND IN WRITING, BY LIGO LABORATORY. REFER TO LIGO-E0900364.

(9) PART TO BE OXIDIZED PER LIGO SPECIFICATION E1100842.

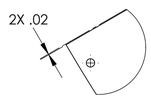

DETAIL A
SCALE 1 : 2

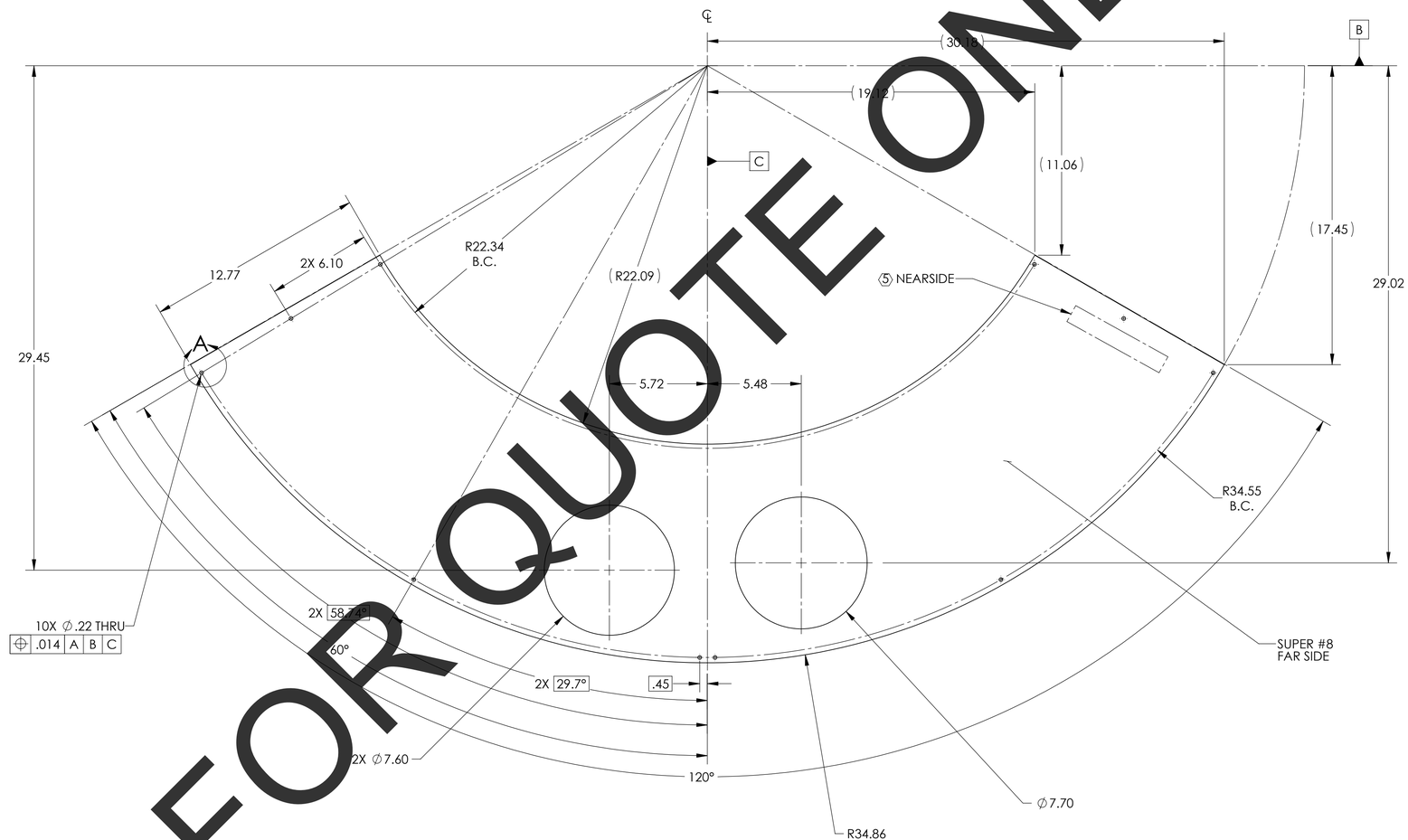

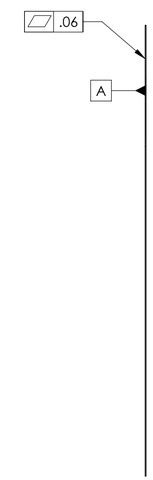

FOR QUOTE ONLY

NOTES AND TOLERANCES: (UNLESS OTHERWISE SPECIFIED)

DIMENSIONS ARE IN INCHES

TOLERANCES:
.XX ± .03
.XXX ± .010

ANGULAR ± 0.5°

1. INTERPRET DRAWING PER ASME Y14.5-1994.
2. REMOVE ALL SHARP EDGES, .005-.015. FOR MACHINED PARTS. ROUND ALL EDGES APPROXIMATLEY R.02 FOR SHEET METAL PARTS.
3. DO NOT SCALE FROM DRAWING.
4. ALL MACHINING FLUIDS MUST BE FULLY SYNTHETIC, FULLY WATER SOLUBLE AND FREE OF SULFUR, SILICONE, AND CHLORINE.

MATERIAL: 18 GAUGE 304 SSTL
FINISH: SUPER #8 (9)

LIGO — CALIFORNIA INSTITUTE OF TECHNOLOGY, MASSACHUSETTS INSTITUTE OF TECHNOLOGY

SYSTEM: ADVANCED LIGO
SUB-SYSTEM: AOS
NEXT ASSY: D1003227

PART NAME: LOWER FACE PLATE, ETM Y

DESIGNER	TQ. NGUYEN	4 APR 2012
DRAFTER	TQ. NGUYEN	4 APR 2012
CHECKER	L. AUSTIN	
APPROVAL	C. TORRIE	

SIZE: D
DWG. NO.: D1200518
REV.: v1
SCALE: 1:4
PROJECTION:
SHEET 1 OF 1

D1200518_aLIGO_Manifold_Cryo_Baffle_Lower_Face_Plate_ETMY_PART FIDM REV-X-005, DRAWING FIDM REV-X-006

REV.	DATE	DCN #	DRAWING TREE #
v1	31 OCT 2012	-	-
v2	15 DEC 2012	E1000360	-
-	-	-	-

NOTES CONTINUED:

(3) SCRIBE, ENGRAVE (A VIBRATORY TOOL MAY BE USED), DO NOT STAMP OR LASER MARK (NO INKS OR DYES) DRAWING PART NUMBER, REVISION (AND VARIENT OR "TYPE" IF APPLICABLE) ON NOTED SURFACE OF PART FOLLOWED ON THE NEXT LINE WITH A THREE DIGIT SERIAL NUMBER. SERIAL NUMBERS START AT 001 FOR THE FIRST ARTICLE AND PROCEED CONSECUTIVELY. USE MINIMUM 0.12" HIGH CHARACTERS, UNLESS THE SIZE OF THE PART DICTATES SMALLER CHARACTERS.
EXAMPLE: DXXXXXXX-VY, TYPE-XX, S/N XXX
DO NOT APPLY MARK ON SUPER #8 SIDE

6. APPROXIMATE WEIGHT = 20.910 LBS

7. ALL PARTS SHALL BE MANUFACTURED IN ACCORDANCE WITH LIGO SPECIFICATION E0900364.

(8) SURFACE FINISH TO BE AS-PROCESSED FROM MILL/SUPPLIER, FREE FROM SCRATCHES OR GOUGES.

9 . ALL MATERIAL IS TO BE VIRGIN MATERIAL (i.e. NO WELD REPAIRS, PLUGS OR RECYCLED MATERIAL). NO REPAIRS SHALL BE MADE UNLESS APPROVED IN ADVANCE, AND IN WRITING, BY LIGO LABORATORY. REFER TO LIGO-E0900364.

(10) SCRBIE, ENGRAVE (A VIBRATORY TOOL MAY BE USED), LASER MARK (NO INKS OR DYES) LETTERS AS SHOWN.

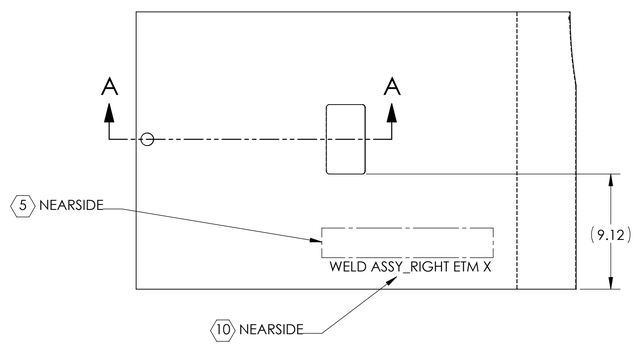

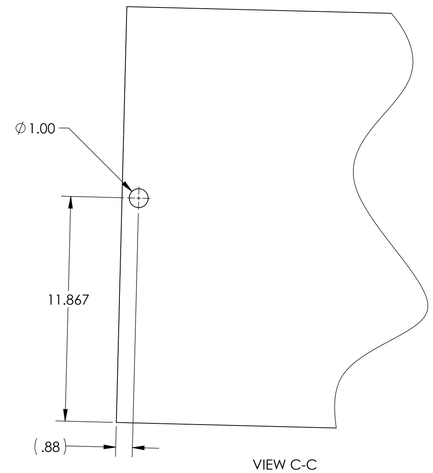

VIEW C-C
SCALE 1 : 4

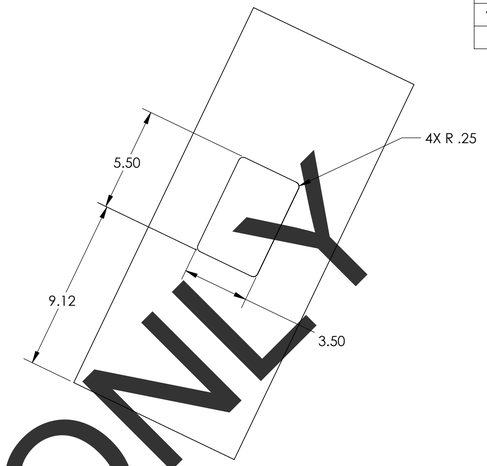

VIEW B-B
SCALE 1 : 4

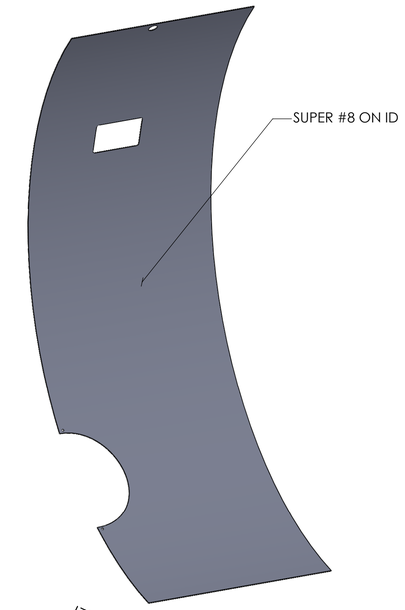

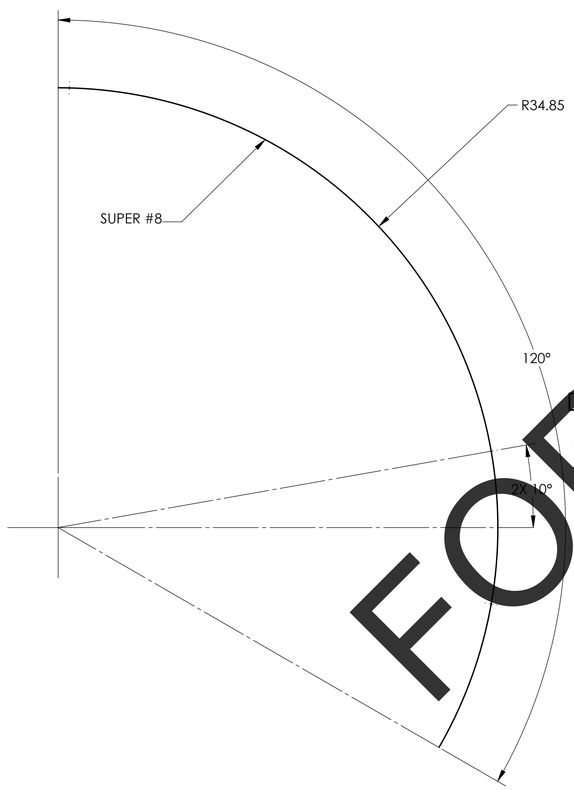

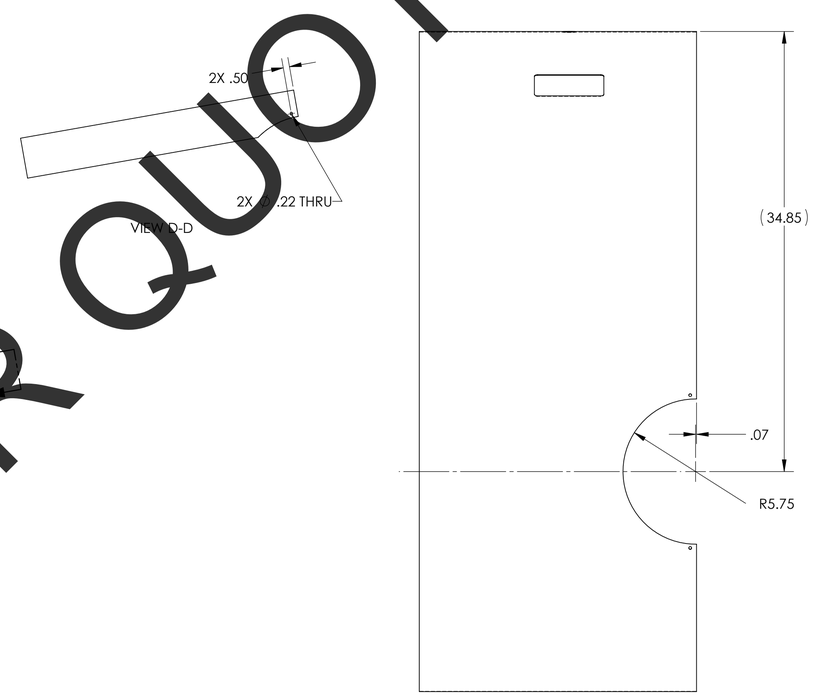

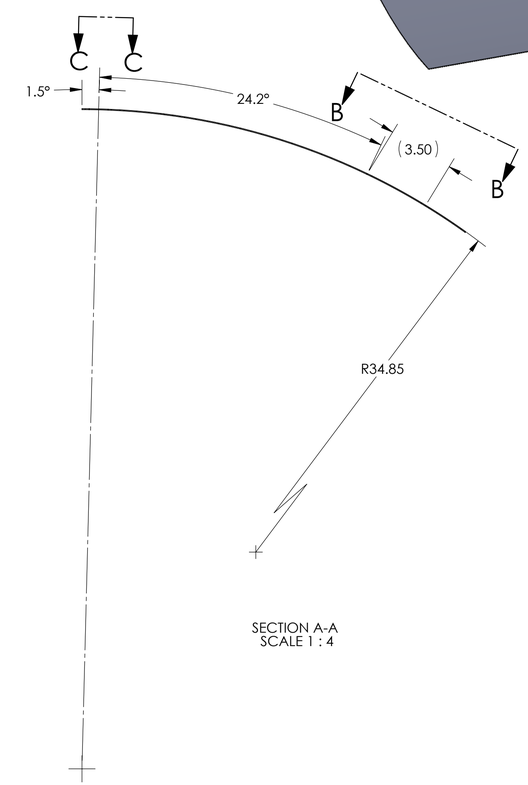

SECTION A-A
SCALE 1 : 4

FOR QUOTE ONLY

NOTES AND TOLERANCES: (UNLESS OTHERWISE SPECIFIED)			
DIMENSIONS ARE IN INCHES TOLERANCES: .XX ± .03 .XXX ± .010 ANGULAR ± 1.0°	1. INTERPRET DRAWING PER ASME Y14.5-1994. 2. REMOVE ALL SHARP EDGES, .005-.015. FOR MACHINED PARTS. 3. DO NOT SCALE FROM DRAWING. 4. ALL MACHINING FLUIDS MUST BE FULLY SYNTHETIC, FULLY WATER SOLUBLE AND FREE OF SULFUR, SILICONE, AND CHLORINE.		
	MATERIAL: 18 GAUGE 304 SSTL	FINISH: SUPER #8 (8)	

LIGO CALIFORNIA INSTITUTE OF TECHNOLOGY
MASSACHUSETTS INSTITUTE OF TECHNOLOGY

SYSTEM: ADVANCED LIGO
SUB-SYSTEM: AOS
NEXT ASSY: D1003186

PART NAME: RADIAL SEGMENT, RIGHT ETM X

DESIGNER	TQ. NGUYEN	11 OCT 2012
DRAFTER	TQ. NGUYEN	9 AUG 2012
CHECKER	L. AUSTIN	
APPROVAL	M. SMITH	

SIZE: D
DWG. NO.: D1201125
REV.: v2
SCALE: 1:6
PROJECTION:
SHEET 1 OF 1

D1201125_aLIGO_Manifold_Cryo_Baffle_ETM X_ Radial Segment Right. PART FDM, REV: X-014, DRAWING FDM, REV: X-010

NOTES CONTINUED:

(3) SCRIBE, ENGRAVE (A VIBRATORY TOOL MAY BE USED), DO NOT STAMP OR LASER MARK (NO INKS OR DYES) DRAWING PART NUMBER, REVISION (AND VARIENT OR "TYPE" IF APPLICABLE) ON NOTED SURFACE OF PART FOLLOWED ON THE NEXT LINE WITH A THREE DIGIT SERIAL NUMBER. SERIAL NUMBERS START AT 001 FOR THE FIRST ARTICLE AND PROCEED CONSECUTIVELY. USE MINIMUM 0.12" HIGH CHARACTERS, UNLESS THE SIZE OF THE PART DICTATES SMALLER CHARACTERS.
EXAMPLE: DXXXXXXX-VY, TYPE-XX, S/N XXX
DO NOT APPLY MARK ON SUPER #8 SIDE

6. APPROXIMATE WEIGHT = 20.910 LBS.

7. ALL PARTS SHALL BE MANUFACTURED IN ACCORDANCE WITH LIGO SPECIFICATION E0900364.

8. ALL MATERIAL IS TO BE VIRGIN MATERIAL (i.e. NO WELD REPAIRS, PLUGS OR RECYCLED MATERIAL). NO REPAIRS SHALL BE MADE UNLESS APPROVED IN ADVANCE, AND IN WRITING, BY LIGO LABORATORY. REFER TO LIGO-E0900364.

(9) SURFACE FINISH TO BE AS-PROCESSED FROM MILL/SUPPLIER, FREE FROM SCRATCHES OR GOUGES.

(10) SCRIBE, ENGRAVE (A VIBRATORY TOOL MAY USED), LASER MARK (NO INKS OR DYES) LETTERS AS SHOWN.

REV.	DATE	DCN #	DRAWING TREE #
v1	1 NOV 2012	-	-
v2	15 DEC 2012	E1000360	-
-	-	-	-

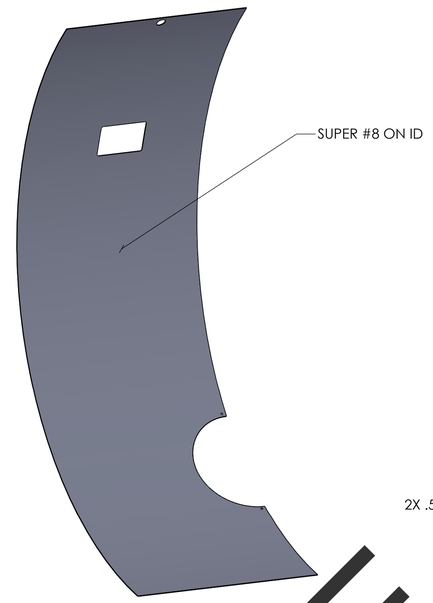

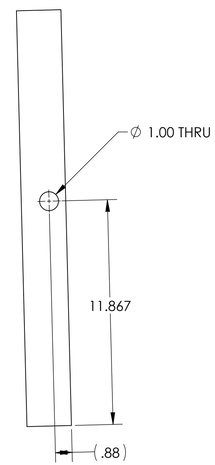

VIEW B-B
SCALE 1 : 4

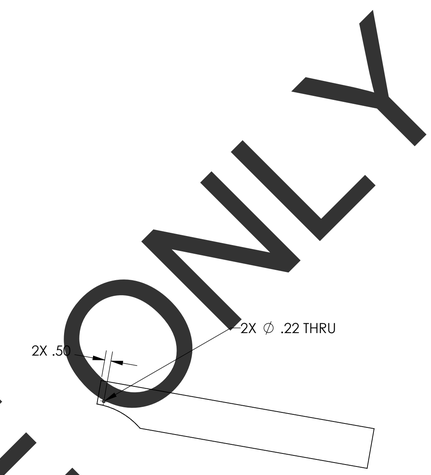

VIEW D-D

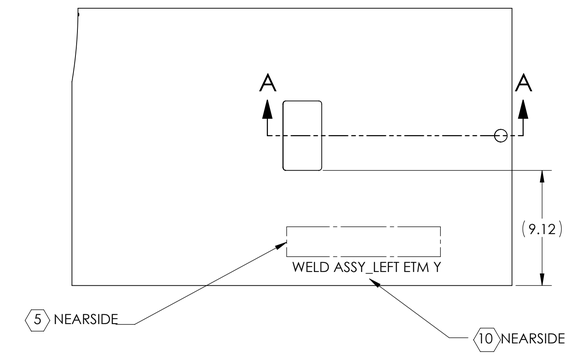

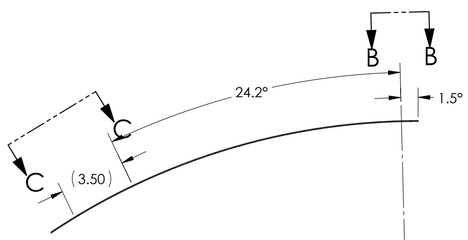

SECTION A-A
SCALE 1 : 4

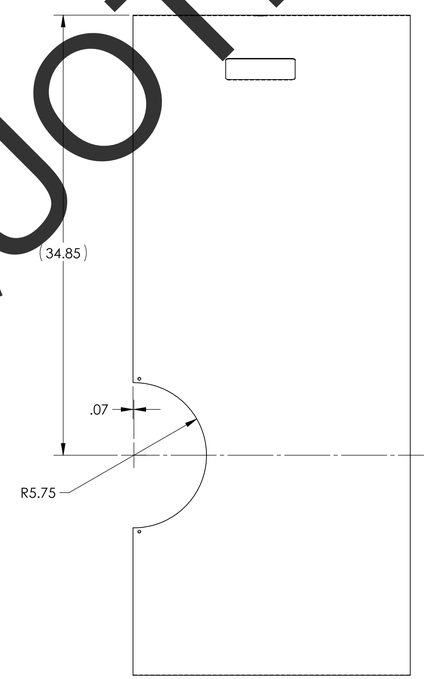

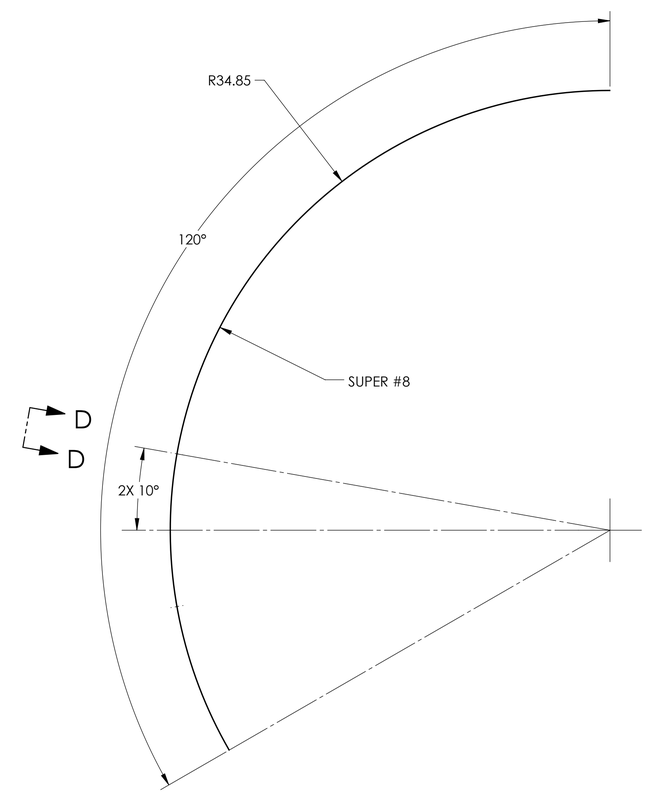

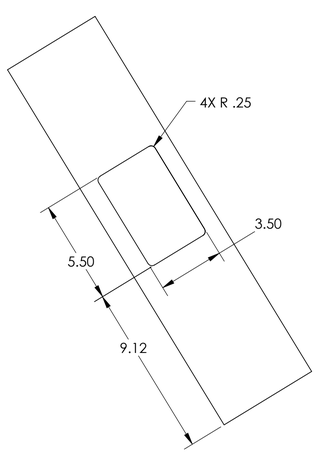

SECTION C-C
SCALE 1 : 4

FOR QUOTE ONLY

NOTES AND TOLERANCES: (UNLESS OTHERWISE SPECIFIED)

DIMENSIONS ARE IN INCHES

TOLERANCES:
.XX ± .03
.XXX ± .010

ANGULAR ± 1.0°

1. INTERPRET DRAWING PER ASME Y14.5-1994.
2. REMOVE ALL SHARP EDGES, .005-.015. FOR MACHINED PARTS.
3. DO NOT SCALE FROM DRAWING.
4. ALL MACHINING FLUIDS MUST BE FULLY SYNTHETIC, FULLY WATER SOLUBLE AND FREE OF SULFUR, SILICONE, AND CHLORINE.

MATERIAL: 18 GAUGE 304 SSTL

FINISH: SUPER #8 (9)

LIGO CALIFORNIA INSTITUTE OF TECHNOLOGY MASSACHUSETTS INSTITUTE OF TECHNOLOGY

SYSTEM: ADVANCED LIGO

SUB-SYSTEM: AOS

NEXT ASSY: D1003233

PART NAME: ETM Y RADIAL SEGMENT, LEFT

DESIGNER	TQ. NGUYEN	19 OCT 2012
DRAFTER	TQ. NGUYEN	1 NOV 2012
CHECKER	L. AUSTIN	
APPROVAL	M. SMITH	

SIZE: D

DWG. NO.: D1201405

REV.: v2

SCALE: 1:6

PROJECTION:

SHEET 1 OF 1

D1201405 aLIGO_Manifold_Cryo_Baffle_ETM Y_Radial Segment Left, PART PDM REV: X-003, DRAWING PDM REV: X-006