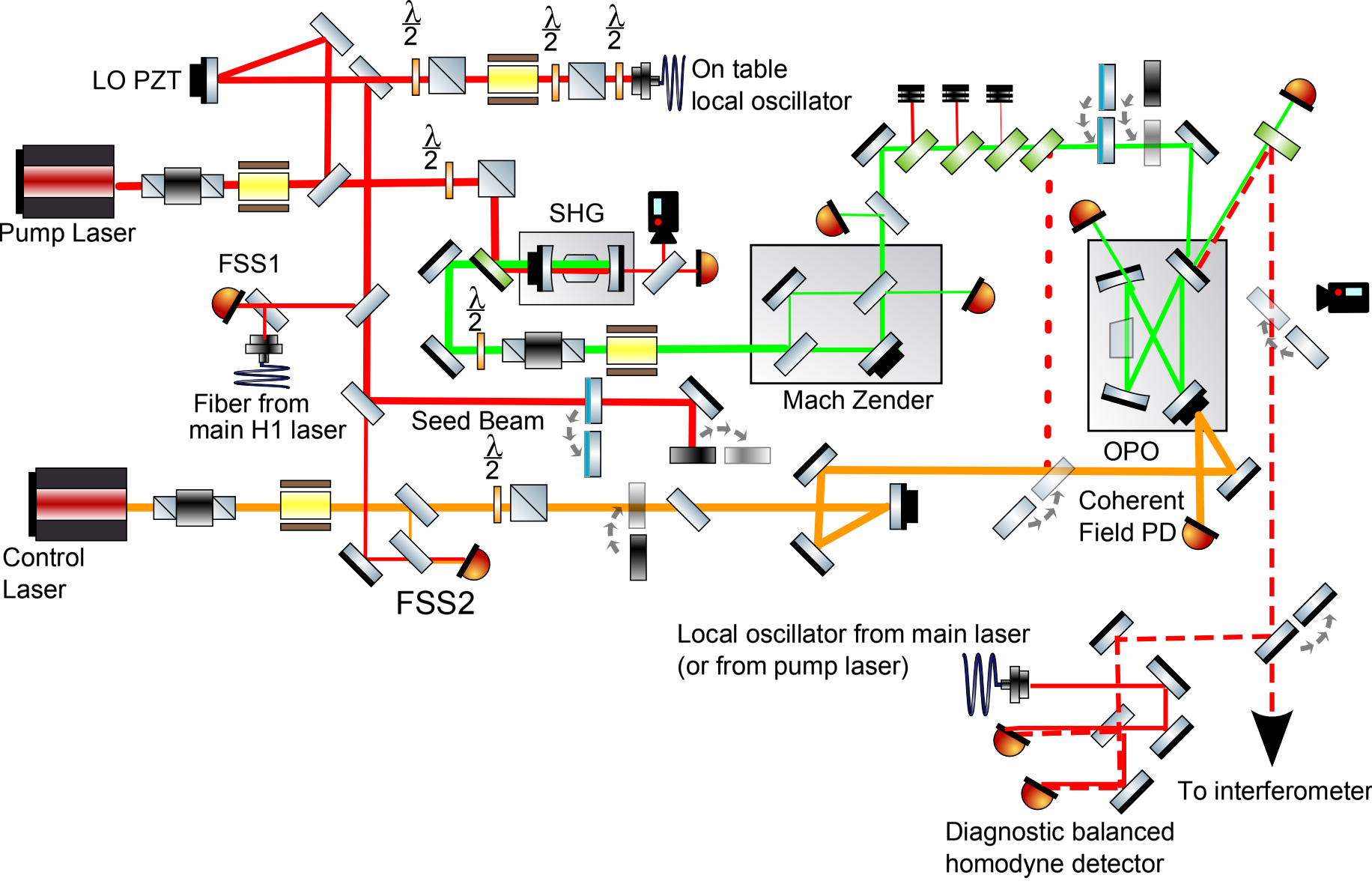
LO PZT
On table
local oscillator
Pump Laser
SHG
FSS1
Fiber from
main H1 laser
Seed Beam
Mach Zender
OPO
Coherent
Field PD
Control
Laser
FSS2
Local oscillator from main laser
(or from pump laser)
To interferometer
Diagnostic balanced
homodyne detector