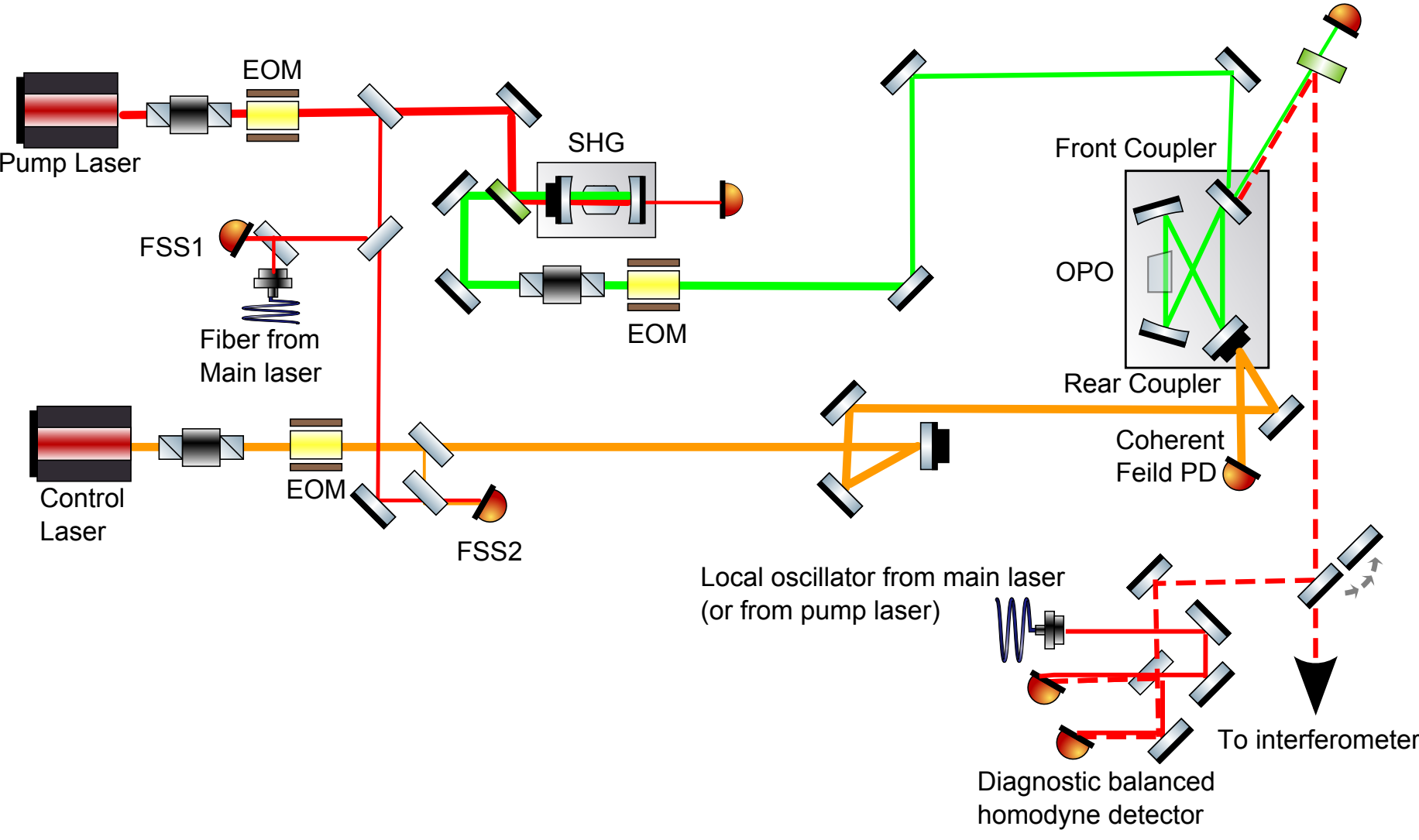
EOM
Pump Laser
SHG
Front Coupler
FSS1
OPO
Fiber from
Main laser
EOM
Rear Coupler
Coherent
Feild PD
Control
Laser
EOM
FSS2
Local oscillator from main laser
(or from pump laser)
To interferometer
Diagnostic balanced
homodyne detector