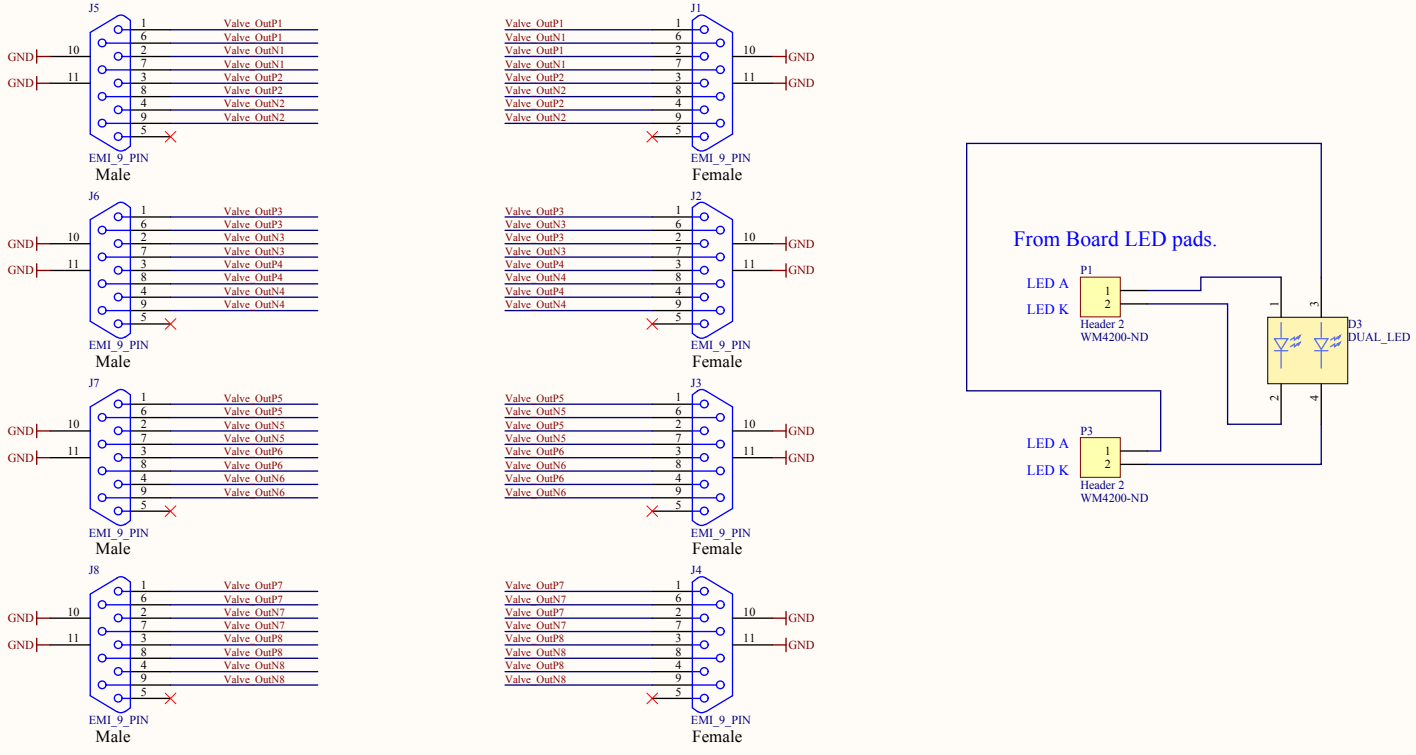

Title	*8-Channel Valve Driver Adapter Board*		
Size: B	DCC Number: D1300349		*Ligo Project* *California Institute of Technology* *Massachusetts Institute of Technology*
Drawn by: Ben Abbott	Date: 4/16/2013	Revision: v1	
File: C:\restored\Ben\HEPI\New HEPI\Newer 8CH Valve Driver\8-Ch adapter\8-Channel Adapter.Sch.Doc			Time: 4:20:30 PM Sheet 1 of 1

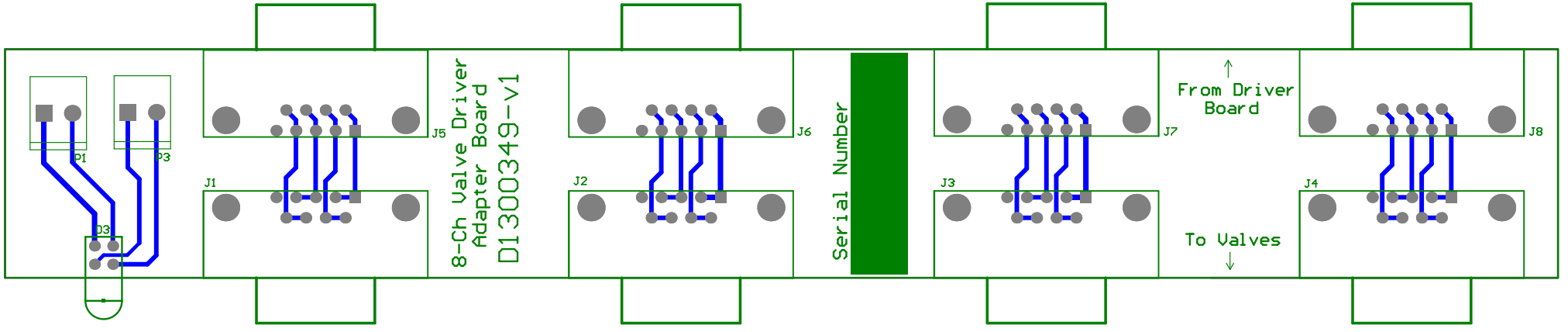
P1
P3
D3
J1
J5
8-Ch Valve Driver
Adapter Board
D1300349-v1
J2
J6
Serial Number
J3
J7
From Driver
Board
To Valves
J4
J8