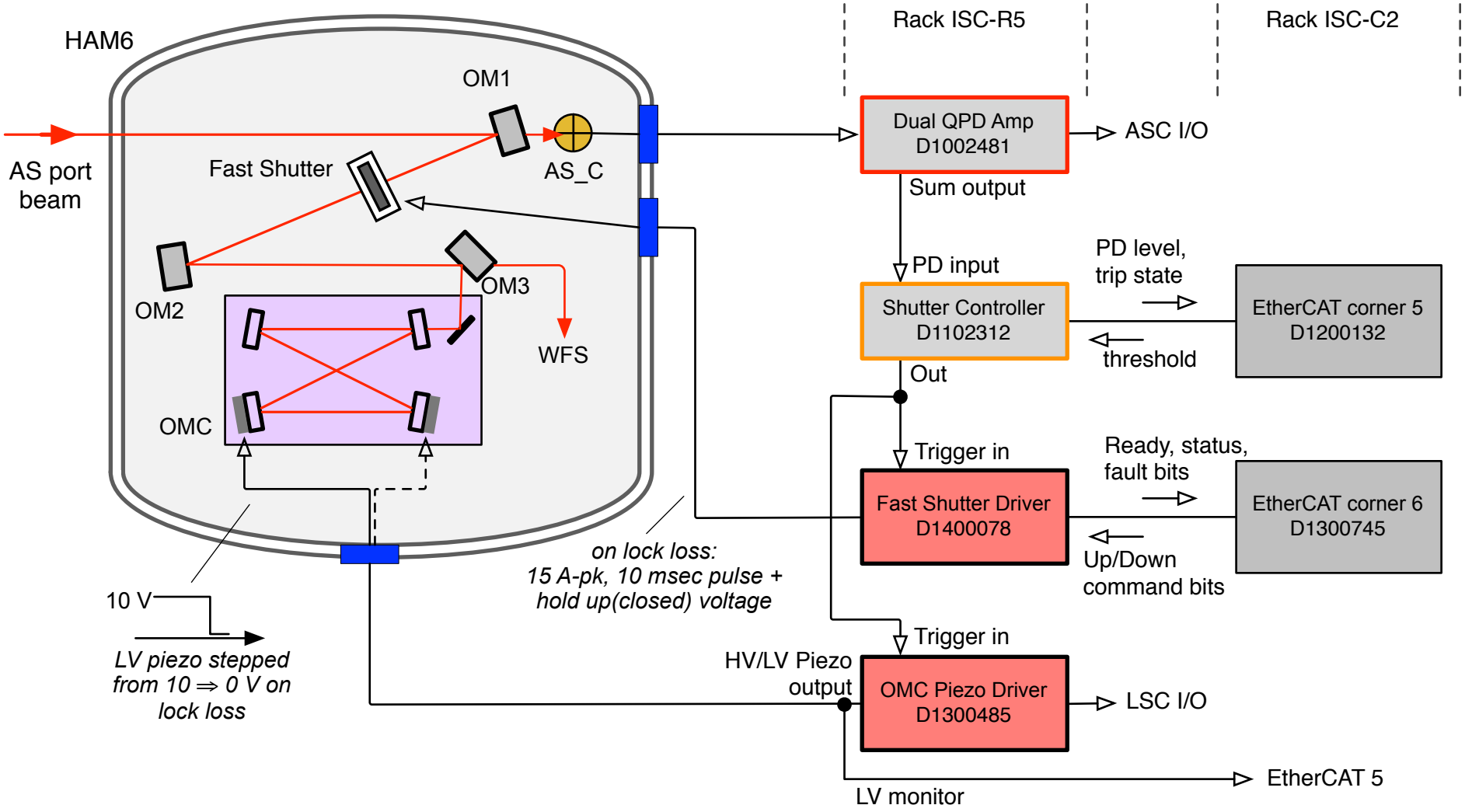

Anti-Symmetric Port Shutter Protection System

D1600319-v2
10 August 2016